This manual contains active content, you must "trust" this document or select "play" to view the active content.
If you can read this warning, you may not have yet activated this document.

CHAPTER 4

AIRCRAFT ELECTRICAL SYSTEMS

As an Aviation Electrician's Mate (AE), you will work with many electrical systems and may work directly or indirectly with all other aviation maintenance ratings. For example, you may work with Aviation Machinist Mates (ADs) on power plant discrepancies or with Aviation Structural Mechanics (AMs) on electrohydraulic malfunctions. Consequently, you must be a well-rounded aviation technician.

In this chapter, you will learn about various systems that AEs regularly maintain. Maintaining naval aircraft systems is the number one priority; teamwork and maximum effort will pay dividends in flight safety and mission accomplishment.

LEARNING OBJECTIVES

When you have completed this chapter, you will be able to do the following:

1. Recognize operating principles and construction features of aircraft lighting.
2. Describe the types of lamps used in aircraft lighting and their circuits.
3. Identify the types, purposes, and uses of aircraft internal lighting.
4. Recognize operating principles and characteristics of aircraft electrohydraulic and pneumatic systems.
5. Define terms used in aircraft environmental control systems.
6. Identify the components used in aircraft environmental control systems.
7. Explain the operating principles and features of aircraft temperature and pressure control systems.
8. Describe the operating principles and features of aircraft anti-icing system.

AIRCRAFT LIGHTING SYSTEMS

The lighting system in an aircraft serves two primary purposes; it provides specialized light sources outside the aircraft and illuminates the interior. Exterior lights provide illumination at night for navigation and formation flying. Other exterior light operations include signaling, landing, and anti-collision. The interior lighting provides illumination for instruments, equipment, crew stations, and cabins. In addition, the electrical, electronic, and mechanical systems use lights to indicate normal operation or a possible malfunction. Lights also show the position of the landing gear, bomb bay doors, etc.

Various types and sizes of light assemblies are used on present-day naval aircraft. The lighting requirement governs the selection of a particular light assembly. Most light assemblies consists of a housing (fixture), a lamp, and a lens.

Description and Types of Lamps

Aircraft lamps are devices that provide sources of artificial light. The incandescent light is the most common type. It uses an electrical source to heat a filament until it is white hot. Normally, the source voltage is 26 to 28 volts alternating current (ac) or direct current (dc). However, some lighting systems use lower voltage lamps and step-down

transformers to supply 3 to 6 volts to the lamps. The lower operating voltage allows the lamp filament to be larger, and it helps to reduce lamp failure due to vibrations.

The parts of a lamp are the bulb, filament, and base. Incandescent lamps vary chiefly in electrical rating, base type, bulb shape, and bulb finish.

The electrical rating of lamps is expressed as a combination of volts, watts, amperes, and candlepower. (Candlepower is the luminous intensity expressed in candles and used to specify the strength of a light source.) The lamp rating is found on either the base or the bulb of the lamp. On small lamps, an identifying number represents the electrical rating. This number is the same as the Military Specification (MS) dash number and can be found on the lamp base.

The base types vary as to size, number of electrical contacts, and the method of securing in a socket. The most common types of bases are the single- or double-contact bayonet (push in and turn). These bases are used on aircraft since they lock in the socket and do not loosen because of vibration. Single contact bases are used in single-wire systems. In this system, one side of the lamp filament connects to the base and the other to the contact. Dual filaments use a common contact to the base. Single and double-contact lamps are not interchangeable.

Some bases are of the screw type. They aren't used often because they loosen easily. Other lamps have an indexing-type base that has offset index pins. (*Figure 4-1*) The index-type base is used to make sure that the lamp sits in the socket and the light shines in the proper direction.

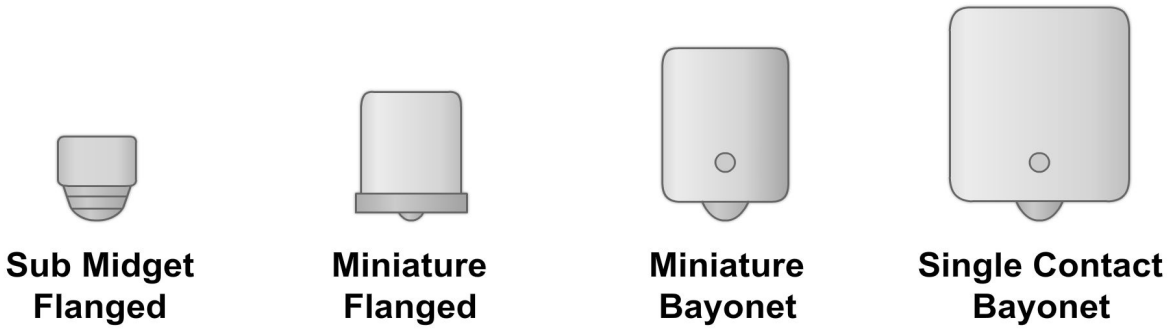

Figure 4-1 — Lamp bases.

Some lamps do not have a base; they solder directly onto a circuit board or permanently mount in control box panels. These lamps go through careful testing and selection so they last the life of the aircraft. *Figure 4-2* shows one such lamp, the grain of wheat lamp.

The bulb shape is shown by a combination of letters and numerals. The letter shows the bulb shape, and the number shows the approximate maximum diameter of the bulb, in eighths of an inch. The codes and the shapes they indicate for the more common glass bulbs are as follows:

G	Globular
GG	Grimes globular
S	Straight
T	Tubular
PAR	Parabolic aluminum reflector
R	Reflector

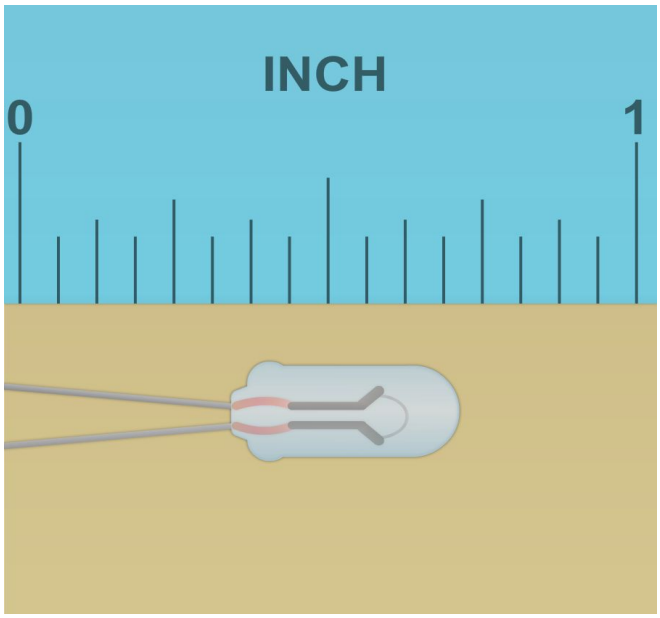

Figure 4-2 — Grain of wheat lamp.

By looking at the letter designations, you know that a bulb designated as T-6 is a tubular bulb with a $^{6}/_{8}$-inch diameter. A variety of sizes and shapes of bulbs are listed in the Defense Logistics Agency (DLA) Identification List. This list is available through your local supply support center. *Figure 4-3* shows some common bulb shapes.

Most aviation lamps are either clear glass or frosted on the inside. For a particular application, however, a bulb may be partially frosted; for example, to cut down emission of light in a particular direction. Another bulb may be partially silvered to prevent emission in a specified direction and/or to concentrate the light in other directions. Some applications call for colored bulbs; for example, in instrument illumination and safety lights. The letters just before the MS dash number shows bulb finish-R for red, SB for silvered bowl. If no letter is present, the lamp is clear glass or frosted. You can also provide colored lighting by using clear lamps with a colored lens cover.

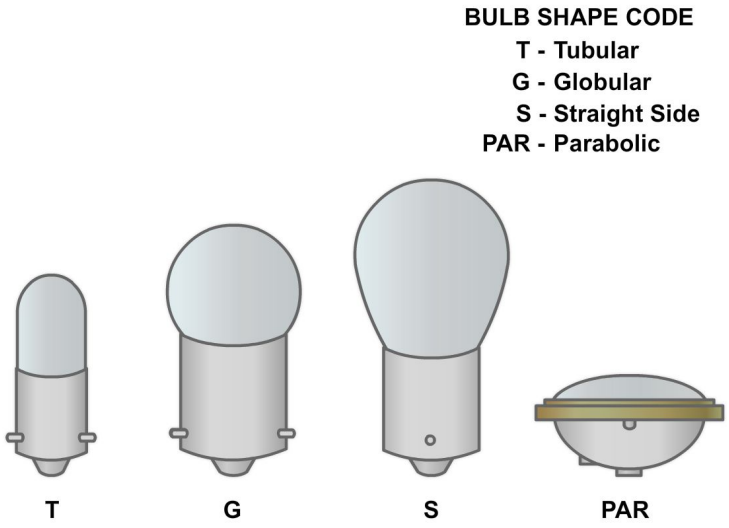

Figure 4-3 — Common bulb shapes.

There are many special-purpose lamps in use on naval aircraft. Three of the most common types are listed below:

1. The parabolic light is a sealed-beam light used in the landing and taxi light systems. Signal lights also are used in sealed-beam lamps.
2. The midget-flange type of light is for use in instrument panels and control boxes.
3. Fuselage and signal lights use lamps having two filaments in parallel to provide fast signaling (smaller filaments heat and cool faster).

When a lamp fails, the replacement must be the same as the original lamp or an approved alternate. For those aircraft that carry onboard spare lamps it must be ensured that they are shock mounted. If they were not, they would probably fail earlier than the original lamps because cold filaments are subject to fatigue failure sooner than hot ones. You need to be sure that the glass bulb of the lamp is clear and free from grease and dirt. To help keep bulbs clean, do not touch the glass bulb with your bare hands, if possible.

Exterior Lighting

Many types of lights are used to meet the exterior lighting requirements of naval aircraft. The principal types of exterior lights are the navigation or position lights, anti-collision lights, landing lights, and formation lights.

Figure 4-4 shows the components used in the exterior lighting system of a carrier-type aircraft. This figure shows the lights common to naval aircraft, but does not show every type of light in use on different aircraft. The lighting requirements vary from one aircraft to another, depending upon the aircraft type.

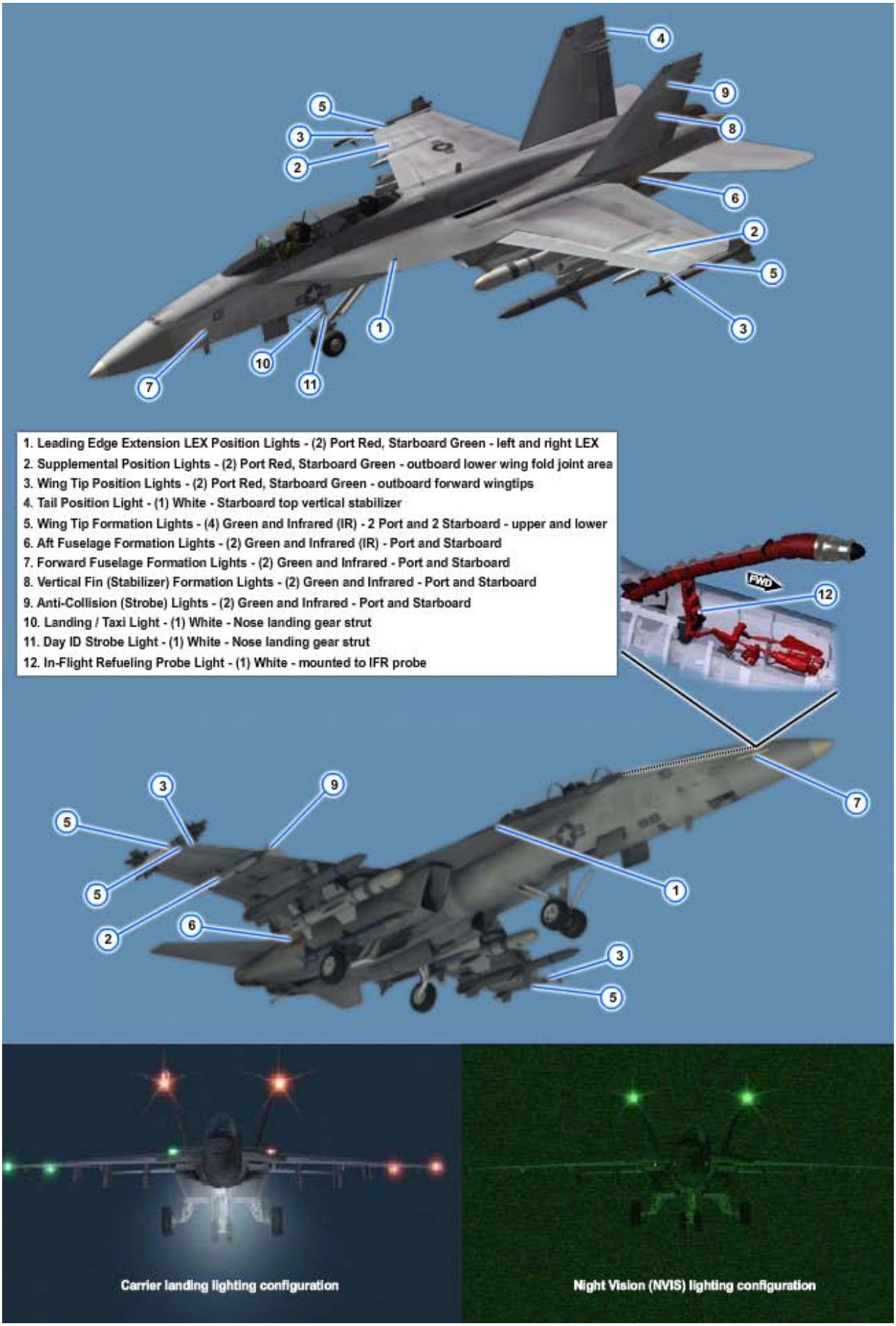

Figure 4-4 — Exterior lighting.

Navigation Lights (Position Lights)

Navigation lights on the aircraft attract visual attention to its position and heading at night. A standard minimum set of navigation lights, meeting Federal Aviation Administration (FAA) requirements for light distribution and intensity, is on all military heavier-than-air aircraft.

The standard **minimum** set of navigation lights for night operations consists of the following:

- One red light on the tip of the left wing
- One green light on the tip of the right wing
- One white light on the tail, so it is visible over a wide angle from the rear

> **NOTE**
>
> The position for these navigation lights is on a stationary surface to the extreme left, right, and aft on helicopters.

In some aircraft configurations, navigation lights burn steadily; in other configurations they burn steadily or flash about 80 flashes per minute.

Fuselage Lights

Fuselage signal lights are part of the aircraft navigation lighting system. They provide a method of visual signaling. When installed, two or more fuselage lights are necessary, one on the top and one on the bottom of the aircraft. If it is not practical to install the light on the bottom of the aircraft, such as on a seaplane or with a radome obstruction, you install two lights. Position one on each side as near the bottom of the aircraft as possible. Fuselage lights may burn steadily or flash at a constant rate. On some aircraft, manual keying of lights for signaling is available.

Anti-collision Lights

Anti-collision beacon lights are an FAA requirement for all aircraft. Their primary purpose is flight safety during daylight hours as well as at night.

One type of anti-collision light consists of two 40-watt reflector-type lights and a red lens assembly. An alternating current (ac) or direct current (dc) motor rotates the bulb assembly, causing it to flash 80 to 90 flashes per minute. Slip rings provide electrical power to the bulbs.

On another type of anti-collision light, the bulb is stationary. The flashing is caused by motor-driven reflectors in the light assembly.

Most aircraft are now using strobe lights to provide anti-collision warning to other aircraft. This system has a 3,000 to 3,500 candlepower white light for day and 150 to 200 candlepower red light for night. Both flash at 60 flashes per minute.

Aircraft equipped with in-flight fueling tanker capabilities can turn off the lower anti-collision light during delivery of fuel to another aircraft. Tanker aircraft use a bluish-green lens over their anti-collision lights to identify fueling capability to other aircraft in need of fuel.

Many aircraft have been retrofitted with Infrared (IR) anti-collision light assemblies which provide anti-collision warning to aircraft operating with night vision goggles or other infrared detection systems. IR anti-collision light assemblies consist of a ring housing with six IR diodes located around the outer edge of the ring.

Landing Lights

Modern naval aircraft have high candlepower landing lights to illuminate the landing strip. Multi-engine aircraft usually have a landing light mounted on each wing. Single-engine aircraft use only one landing light, which normally mounts on the port wing.

Landing lights are usually retractable *(Figure 4-5)*. Sealed-beam lights with a rating of 28 volts, 600 watts are used. They use split-field series dc motors or ac induction motors to provide drive operation. The 28-volt ac is provided by an autotransformer located within each light assembly. In the retracted position, movable lights are flush with the undersurface of the wing. In some aircraft, you can install a landing light in the nose wheel fairing door. Other aircraft have a fixed landing light, mounted in the leading edge of the wing.

As you read this section, refer to *Figure 4-5 view A.* You are going to learn about the operating principles of a typical retractable landing light.

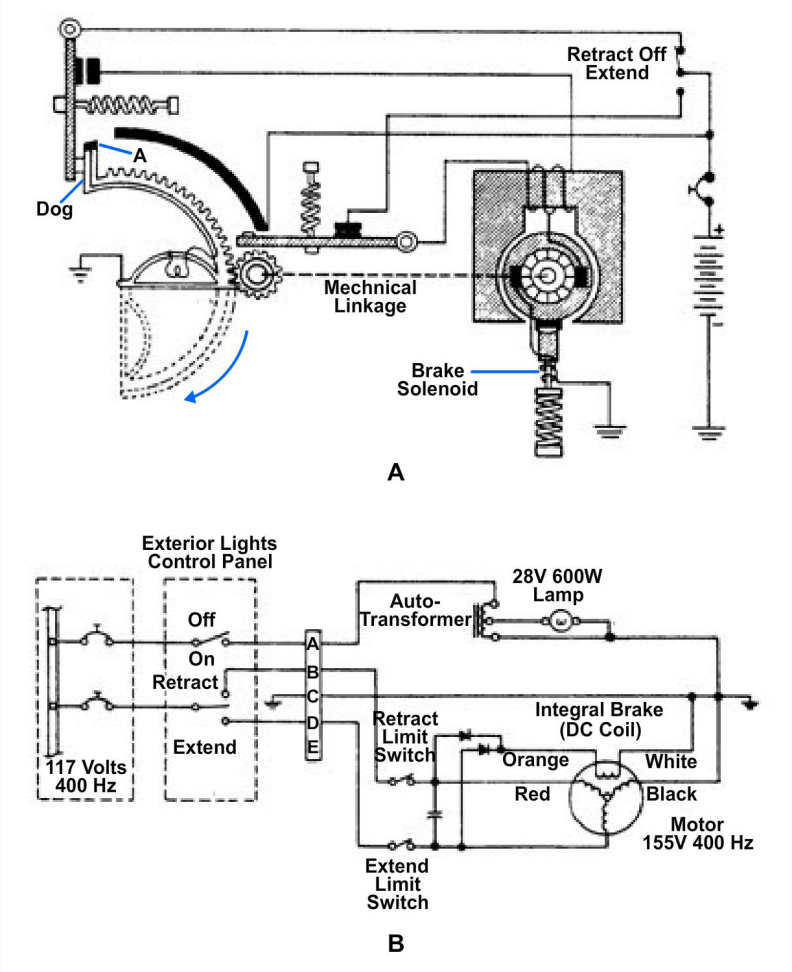

Figure 4-5 — Retractable landing lights.

The landing light switch on the pilot's lighting panel controls the landing light motor. When the switch is in either the EXTEND or RETRACT position, power goes simultaneously to the magnetic brake (releasing the brake) and the drive motor. Limit switches open the motor circuit when the light has reached its limit of travel in either direction (extended or retracted position). This light can be put in any position between its travel limits by turning the switch off. When the power to the motor is off, the gear train holds the light in that position.

The lamp illuminates by a sliding contact after the light assembly travels downward about 10 degrees. Illumination continues until the lamp again reaches the 10-degree position when traveling in the upward direction. The lamp will remain lighted in any extended position past the 10-degree position, regardless of power application to the control motor. The pilot can adjust the angle of the light beam to fit the operation. A switch lets the pilot turn the lamp off while the light is in any position, as shown in *Figure 4-5, view B*.

The landing light assembly design lets you adjust the maximum extended position for each particular aircraft installation. The light opens to an extended position of 73 degrees, ±3 degrees, from the retracted position. The light assembly is capable of being extended to positions ranging from 50 degrees to 85 degrees from the retracted position.

Technicians must not let landing lights overheat or be damaged by extending them against ground support equipment when they are ground tested. You should NEVER look directly at an illuminated landing light because it can cause permanent eye damage.

Approach Lights

The carrier aircraft approach light systems give the pilot and Landing Signal Officer (LSO) positive indication of safe or unsafe landing configurations. All shipboard naval aircraft have approach lights mounted so they are clearly visible to the LSO. Installations of the approach lights vary with aircraft. Older aircraft have them in the port wing leading edge. Modern aircraft, such as the EA-6B and F/A-18 *(Figure 4-6, frame 1)*, have the approach lights on the nose landing gear or landing gear door.

Most jet aircraft have a three-lamp Angle of Attack (AOA) approach light assembly and AOA indexer light assembly used simultaneously. These type aircraft are carrier-based. The one described herein is for the F/A-18. The AOA Approach Light Assembly is three lights (red, amber and green) which correspond to the aircraft's AOA indication and incorporates a test switch to allowing testing the lights. Additionally, an AOA Indexer Light assembly provides a visual indication to the pilot during landing. These lights are varied in brightness by an AOA control knob on the Head-up Display (HUD) control panel and a lights test is provided by a lights test switch on the Interior Lights Control panel.

When the red light is on, it shows that the angle of attack of the aircraft is low. When the green light is on, it shows that the angle of attack of the aircraft is high. When the amber light is on, the angle of attack is optimum for the landing approach.

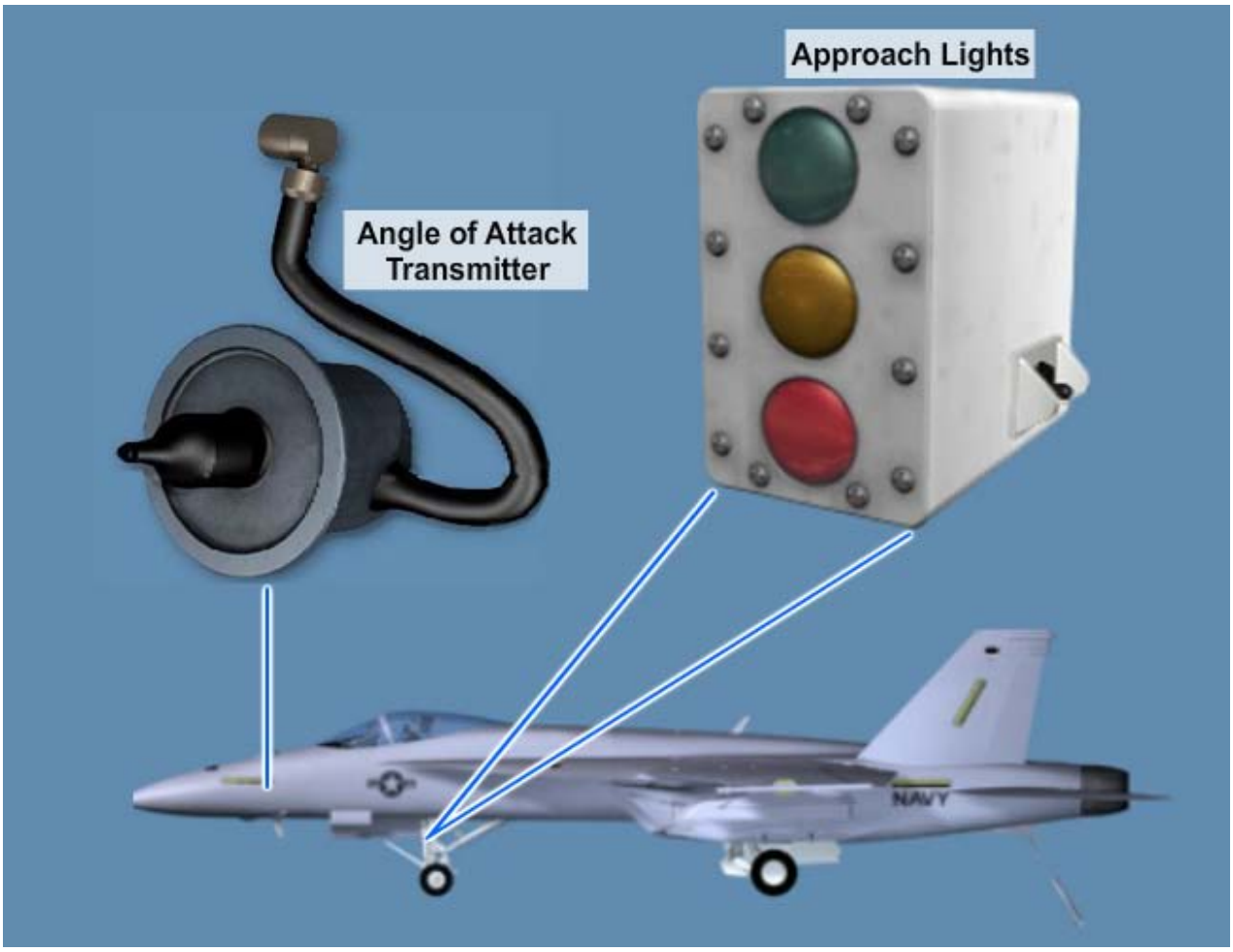

Figure 4-6 — Angle-of-Attack components.

The AOA Approach Lights work in conjunction with the crew station Angle of Attack Indexer lights which give the pilot angle-of-attack information. These lights are mounted directly to the left side of the Heads-Up Display (HUD) Combiner Assembly *(Figure 4-6, frame 2)*. They are clearly visible to the pilot, as not to obstruct vision.

Power for the Approach lights system is provided by three separate power distribution busses, two 28 volts direct current (vdc) and one 115 volts alternating current (vac) and protected by the Approach lights circuit breakers. Both the approach lights and the indexer lights are operated by three discrete signals (High, Low and On Speed) from the Flight Control Computer B (Channel 4) through a Relay Module Assembly (RMA). The Flight Control Computer provides a ground to energize the corresponding AOA relay inside the RMA, depending on the Angle of Attack Transmitter's output. At very low angles of attack, a red-colored inverted V illuminates in the range of 0-6.9 degrees or lower *(Figure 4-6, frame 2)*. This warns the pilot to increase the aircraft angle of attack. At slightly low angles of attack, both the inverted V and circular symbol (doughnut) illuminate in the range of 6.9 to 7.4 degrees *(Figure 4-6, frame 3)*. At optimum desired angles of attack, the amber-colored doughnut illuminates in the range of 7.4 to 8.8 degrees *(Figure 4-6, frame 4)*. At slightly high angles of attack, both the V and doughnut illuminate in the range of 8.8 to 9.3 degrees *(Figure 4-6, frame 5)*. At very high angles of attack, a green-colored V symbol illuminates in the range of 9.3 degrees and up *(Figure 4-6, frame 6)*, warning the pilot to decrease the aircraft angle of attack. Additionally, a movable Angle-of-Attack scale will move vertically as the aircraft pitches. The center of

the scale indicates the best approach angle with respect to the velocity vector. Scale is limited to the HUD field of view.

> **NOTE**
>
> Numbers (Degrees) in HUD Combiner indicate local AOA as seen at Angle of Attack Transmitter by maintenance personnel.

The indexer information corresponds to the approach lights assembly information displayed to the LSO.

Approach lights show the LSO three conditions;

- Approach Angle-of-Attack
- Landing Gear is down and locked and Weight-Off-Wheels (W-OFF-W)
- Arresting Gear is extended

An Approach Light flasher and Approach Light control relay cycles power to the approach light assembly causing the approach lights to flash when the Hook Bypass Switch is set to the carrier position and the arresting gear hook is not down.

An Annunciator Dimming relay provides circuit switching to provide dimming of the Indexer lights when operating at night for night or night vision modes of operation.

A test switch mounted to the AOA Approach lights, when actuated, tests the AOA approach light assembly and turns on the three AOA Approach lights.

Formation Lights

Naval aircraft have formation lights for night formation flying. In a typical formation light installation, wingtip formation lights mount within the upper and lower surfaces of the aft section of each wingtip. Translucent diffusing windows mount flush with the wingtip surface above and below each light. The right-hand (starboard) light covers are green and the left-hand (port) light covers are red. The lamp assembly is accessible through the lower wingtip cover plate.

Fuselage formation lights installations *(Figure 4-4, callouts 5, 6, 7, 8)* are in box assemblies mounted on each side of the fuselage and outer wings. Each has a plastic window for light emission and the lamp is accessed by removing the box cover. These lights connect in parallel with the wingtip formation lights; therefore, they illuminate simultaneously.

> **NOTE**
>
> Manufacturers sometimes identify lights having the same purpose as formation lights by another name such as join-up lights or strip lights.

Taxi Lights

Taxi lights help the pilot maneuver the aircraft before and after flight. On aircraft having a nose wheel, the taxi light assembly mounts on the movable strut so the light turns with the wheel. Light installation provides maximum visibility for the pilot and co-pilot. *(Figure 4-4, callout 10).*

In-Flight Refueling Probe Light

Most modern carrier aircraft have limited range due to their small fuel capacity. To increase range and flight time, day and night in-flight refueling is necessary. Most naval shipboard aircraft have provisions for in-flight refueling. For night refueling, in-flight refueling (IFR) probe lights *(Figure 4-4, callout 12)* mount on the fuselage forward of the probe or on the probe itself. The light lens is usually red or white in color and illuminates the refueling probe and drogue at night.

Hover Lights and Spotlights

In helicopter installations, hover lights illuminate the area directly beneath the aircraft *(Figure 4-7, callout 2)*. These lights serve several purposes, including landing and search and rescue. A spotlight can be mounted in the nose of a helicopter *(Figure 4-7, callout 3)*, and it can extend or retract. An ON/ OFF/ RETRACT switch on the pilot's collective stick and a spring loaded, four-way thumb switch marked EXTEND/ RETRACT/ LEFT/ RIGHT control the spotlight. It can rotate through 360 degrees of azimuth.

Figure 4-7 — Typical helicopter lighting.

Interior Lighting

Various types of lights and lighting systems are used for interior illumination of naval aircraft. Almost all lights and lighting systems fall under one of the following types:

- Instrument lighting
- Crew station lighting
- Cabin and passageway lighting
- Indicator lights

An important consideration in interior lighting of aircraft is the prevention of undue eyestrain. Eyes adjust slowly to changing light intensities, which can cause fatigue or eyestrain. Aircraft lighting designs produce as little discomfort as possible. As an AE, you maintain the aircraft lighting systems. You should follow the specifications when replacing fixtures and lamps. The following general considerations are taken into account when working with the interior lighting of aircraft:

- Use lenses to diffuse light that lies within the pilot's field of vision.
- Eliminate all bright spots of light, direct sources of light, and reflections.
- Use sparingly any surface that reflects light, such as chromium or nickel.
- Use quick-change lighting fixtures so that lamps may be changed rapidly.

For specific aircraft lighting and fixture specifications refer to the applicable Maintenance Instruction Manual.

Instrument Lights

The first use of artificial light in aircraft was for the instrument illumination. Operating modern aircraft depends on instruments; therefore, instrument lighting is important. There are different methods of instrument lighting, and selecting the best is a difficult decision. No matter what system of lighting is in the aircraft, the light must not be visible outside the aircraft.

Indirect (mask) lighting is desirable because it doesn't produce objectionable reflections. The lamps mount in the instrument panel. The panel has a reflector cover (mask), which has openings in it for observing the instruments. The light reflects until it becomes diffused and floods the entire panel. Even though this system produces satisfactory lighting, it is not in common use today because of space and weight requirements.

Another method of instrument lighting, commonly called *post lighting*, uses installation of specially adapted shields in front of the instruments. Small lamps in red-filtered sockets mount in the front surface of the cover shields, which cast light down and onto the instruments. These shields mount around the instrument for vision and are flanged to direct the lights properly for dial illumination.

Rheostats control the intensity of light in most aircraft *(Figure 4-8)*. The rheostat is a variable resistor used to limit current through the circuit. When the pivoting arm reaches the high-resistance end of the rheostat, it slips off the contact surface and breaks the circuit. This arrangement is a rheostat switch.

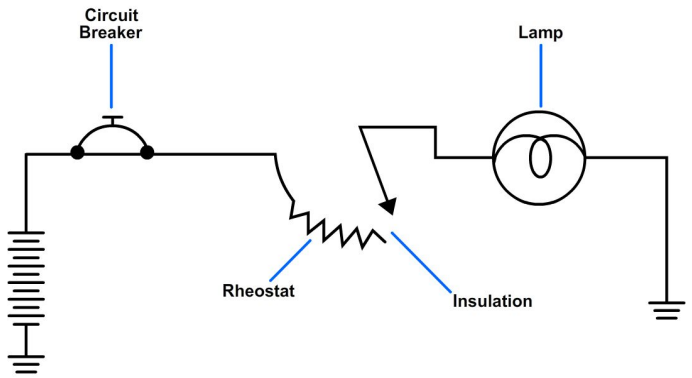

Figure 4-8 — Rheostat switch.

A typical aircraft instrument lighting system is shown in *Figure 4-9*. The lighting equipment consists of edge-lighted control panels, individual lights for instruments, and red floodlights for overall lighting. The edge-lighted panels provide diffused lighting for the control and indicator panels.

Some instruments currently have an integral light source, and all instrument designs will soon have integral lighting. Since individual lights for instruments are compatible with the integrally lighted instruments, the two types of light sources may be intermixed.

The crew station interior lighting system provides primary and secondary lighting for the instruments, instrument panels and consoles. Displays and indicators come on to show information in both day and night environment. Edge-lighted control and indicator panels *(Figure 4-9)* have a non-gloss, black background with white lettering for maximum contrast. The black edge face is mounted so light is diffused through the plastic panel lettering and knob openings. The same light is also infused into the knobs to show position in night time environment. Bulb or edge panel replacement is relatively simple.

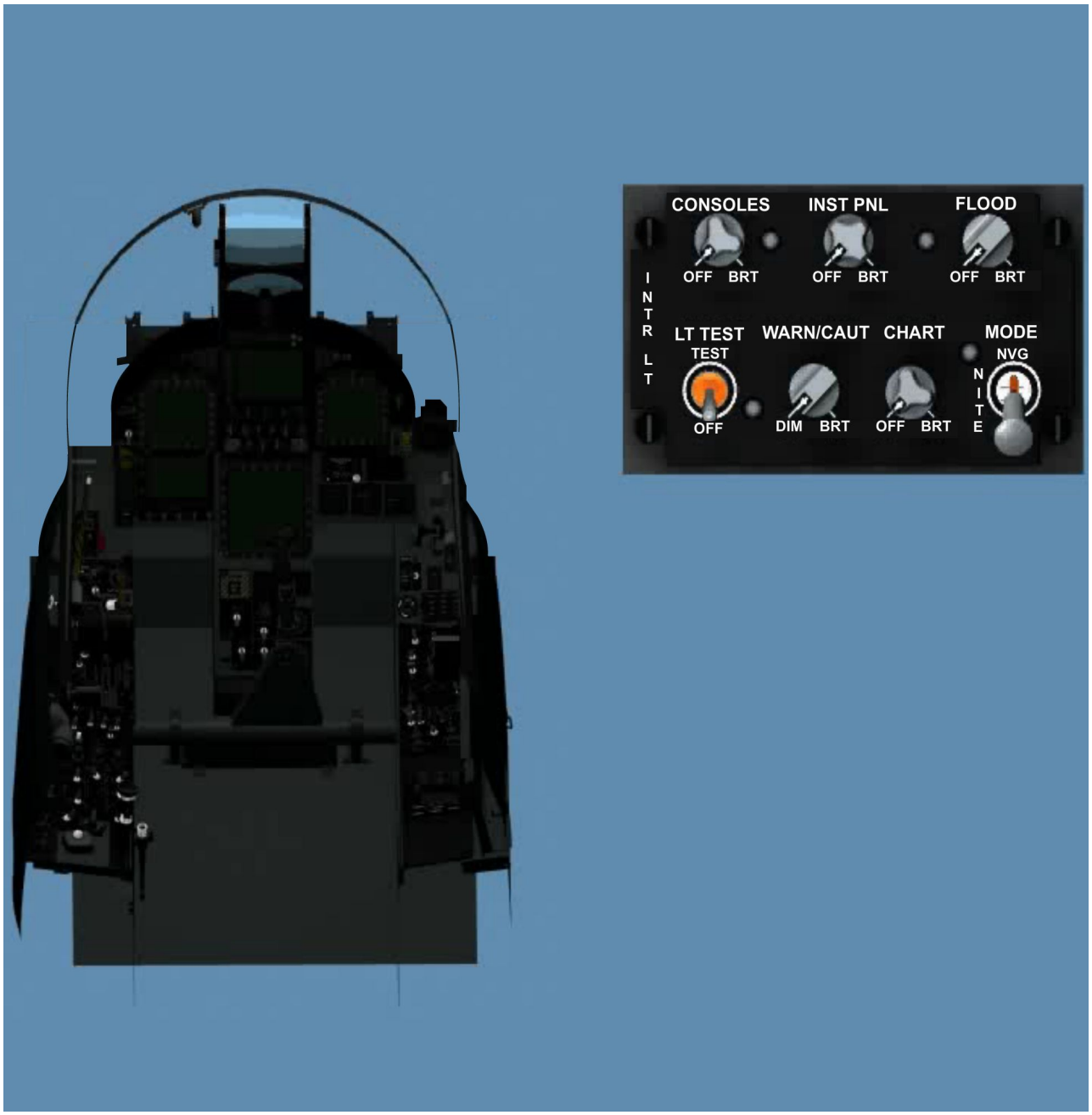

Figure 4-9 — Interior lighting.

The MODE switch, located on the INTR LT panel, is used to select one of three crew station lighting modes; allowing the pilot to optimize interior lighting for ambient light conditions *(Figure 4-9, frame 1)*.

- NVG –Selecting the Night Vision Goggle NVG position reduces the brightness range for the warning, caution, and advisory lights, the Up Front Control Display (UFCD), Multi-Purpose Color Displays (MPCD), and Electronic Fuel Display (EFD). This disables the integral console lights and the white floodlights and enables six NVG compatible floodlights to illuminate the consoles *(Figure 4-9, frames 11, 12, 13, 14, 15 and 16).*
- NITE –Selecting the NITE position reduces the brightness range for the warning, caution, and advisory lights, the UFCD, MPCD, and EFD *(Figure 4-9, frame 2)*.

- DAY - Provides the maximum brightness range for all interior lighting.

The INST PNL lighting knob (*Figure 4-9, frames 3 and 4),* located on the INTR LT panel, is used to control the brightness of the integral lighting varying 0-5 VAC to the Cockpit Electric Light Control for the main instrument panel and the standby magnetic compass. Clockwise rotation of the knob increases main instrument panel lighting intensity from the OFF to BRT positions. The strobe function of the SHOOT light is disabled when the instrument lights are on.

The FLOOD knob *(Figure 4-9, frames 5 and 6),* located on the INTR LT panel, is used to control the brightness of the white cockpit floodlights. Eight floodlights are provided for secondary lighting; three above each console and one on either side of the main instrument panel. Clockwise rotation of the knob increases floodlight intensity from the OFF to BRT positions. The FLOOD knob and all white floodlights are disabled in the NVG mode. There is no brightness control for the six NVG floodlights.

The CONSOLES lighting knob *(Figure 4-9, frames 7 and 8),* located on the INTR LT panel, is used to control the brightness of the integral lighting varying 0-5 VAC to the Cockpit Electric Light Control for the left and right consoles, the hydraulic pressure gauge, and both circuit breaker panels. Clockwise rotation of the knob increases console lighting intensity from the OFF to BRT positions. The CONSOLES knob and integral console lighting are disabled in the NVG mode.

The LT TEST switch, located on the INTR LT panel, is spring loaded to the OFF position. The switch is used to test important crew station lighting to verify bulb integrity prior to flight. The switch requires AC electrical power to operate.

- TEST- Powers all operating warning, caution, and advisory lights, the AOA indexer lights, the integral background lighting on the EFD (BINGO, MODE, and BRT), changes MENU to ENG on the DDIs, provides a CHECK SEAT caution in the F/A-18E, and annunciates the landing gear warning tone.
- OFF – Lights test off.

The WARN/CAUT knob, located on the INTR LT panel, is used to control the brightness of the warning, caution, and advisory lights in the reduced brightness range. Clockwise rotation of the knob increases warning, caution, and advisory light intensity from the OFF to BRT positions. The brightness is full bright in the DAY mode and in the reduced brightness range in the NITE and NVG modes.

Following a power interruption in either DAY or NITE mode, the warning, caution, and advisory lights default to the maximum brightness range. Following a power interruption in the NVG mode, the warning, caution, and advisory lights remain in the reduced brightness range.

The CHART light knob *(Figure 4-9, frames 9 and 10)*, located on the INTR LT panel, is used to control the brightness of the NVG compatible chart light. The chart light is located on the canopy bow at the 11:00 o'clock position and rotates on two axes. Clockwise rotation of the knob increases chart light intensity from the OFF to BRT positions.

In some aircraft, grain-of-wheat lamps have permanent mounts in the control-box panels. Having been aged and carefully selected for output and reliability, the lamps should last for the lifetime of the aircraft.

Cavities and shallow trenches in the panel back accommodate the panel connector, lamps, and route lamp leads to the panel connector. The connector, lamps, and leads are then potted into the back of the panel with a clear plastic potting material. Normally, the lamps are in parallel, and failure of one lamp will not appreciably degrade the panel lighting. The main advantages of embedded lamps are long life, ruggedness, resistance to aircraft vibrations, and better illumination.

Crew Station Lights

The term crew station lighting is rather broad. Its meaning varies, depending on the type aircraft being described. In fighter-type aircraft, it may be interior lighting that consists of individually lighted instruments and switches, lighted control panels, and necessary floodlights. It includes the interior lighting just mentioned as well as many other special lighting assemblies.

A much used lighting device is the small incandescent spotlight known as a utility light assembly. These assemblies, installed at crew stations, are in a position where they provide illumination of equipment that the crew member uses. The light from the lamp assembly can focus in either a small spot or in a wide beam. It also has a red filter for night use. *Figure 4-10* shows one type of light in which an ON-OFF switch and intensity control rheostat control light operation.

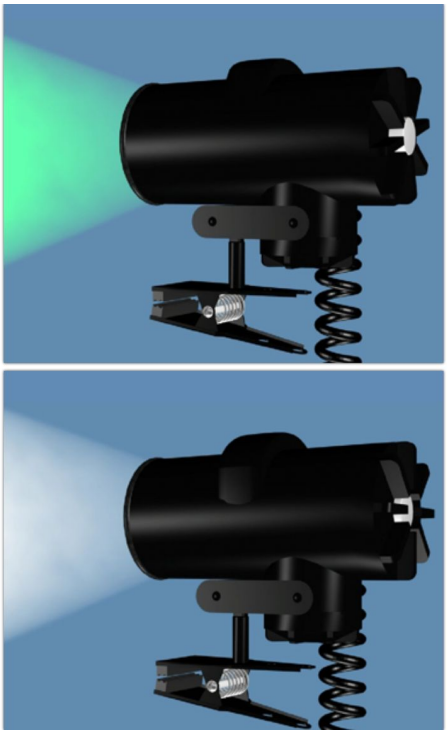

Figure 4-10 — Crew station utility light.

Crew station extension light assemblies provide crew members with an extension light for reading maps or illuminating small areas. These assemblies consist of a connecting cord, switch, and lamp housing assembly. By adjusting the assembly, you can change the size of the light beam.

Indicator Lights

Crew station personnel get aircraft operating status from various indicator (warning, caution, and advisory) lights in the crew station. These lights have many purposes, such as showing the position of the landing gear, arresting hook, wings, and bomb bay doors. They can also show low oil pressure, equipment over temperature, generator failure, and other data.

The construction of indicator lights varies, depending upon the particular job they perform. They mount in the aircraft where they are easily noticeable when glowing. It is important that bulb replacement be quick and easy since some lights relay vital information concerning safety of flight. Whenever practical, assembly design allows bulb replacement in flight without the use of tools. Most warning light designs have a push-

to-test feature or a test switch to determine if the bulb is good. The test switch energizes various test relays, which, in turn, either provide power or a ground circuit for energizing the lights. This allows the bulb to be checked without operating the equipment.

Legend-type lights *(Figure 4-11)* show specific functions on the lens surface. They are prominent on late model aircraft.

- The **warning lights** are red. They warn the crew of an emergency or unsafe operating condition, which requires immediate corrective action.
- The **caution lights** are yellow. They alert the crew to a minor malfunction or impending dangerous condition requiring attention, but not necessarily immediate corrective action.
- The **advisory lights** are green. They show the crew a safe or normal configuration, or a performance condition.

Figure 4-11 — Legend-type lights.

Indicator lights must be bright enough to see during daylight operation but not too bright to cause eyestrain at night. Brilliance control is obtained by connecting resistors in the lighting circuit, and by placing dimmer caps on the lights. Other ways of control are special adaption of edge lighting, and special types of lenses that dim by twisting the lens.

An example of the use of indicator lights is the system used to show high oil temperature. A thermoswitch in the oil return line closes when the temperature reaches above normal. This usually provides a path to ground illuminating the OIL HOT light. The light goes out only when the oil cools to normal temperature.

Another application of the use of an indicator light is the landing gear unlocked warning light. In some aircraft, a red light glows in the translucent landing gear control lever when the gear is not in either the up or down position.

AIRCRAFT ELECTROHYDRAULIC AND PNEUMATIC SYSTEMS

The word *hydraulics* is from the Greek word for water. Hydraulics originally meant the study of physical behavior of water at rest and in motion. Today the meaning includes the physical behavior of all liquids, including hydraulic fluid.

Hydraulics is the science of liquid pressure and flow. In its application to aircraft, hydraulics is the action of liquids, forced under pressure through tubing and orifices, to operate various mechanisms.

The primary concern in working with hydraulics is to control the flow of fluid. You do this by using solenoids that simply turn on, shut off a flow of fluid, or change flow direction. In some cases, electrical devices may schedule a precise amount of fluid flow. In any case, you must understand the characteristics of liquids.

You should recall from chapter 1 that a liquid has no definite shape and conforms to the shape of its container. Also, a liquid can be only slightly compressed. Another fact you should recall is the ability of a liquid to transmit pressure.

The physics of fluids and basic hydraulic principles are contained in *Fluid Power*, NAVEDTRA 14105. Study the first two chapters of this publication with this chapter if you need to review basic hydraulic principles.

Although some aircraft manufacturers make greater use of hydraulics than others, the hydraulic system of the average modern aircraft performs many functions. Among the units commonly operated by hydraulics are the landing gear, wing flaps, speed brakes, wing folding mechanisms, flight control surfaces, canopy, bomb bay doors, wheel brakes, and arresting gear.

Basic Hydraulic System

All hydraulic systems are essentially the same, regardless of their function. Hydraulics are used on the farm, in industry, aboard ship, and many other places as well as in aircraft. Regardless of its application, each hydraulic system has a minimum of four components—reservoir, pump, selector valve, and actuating unit—plus lines through which the fluid flows. *Figure 4-12* shows a basic hydraulic system, with the four essential components and their relationship within the system.

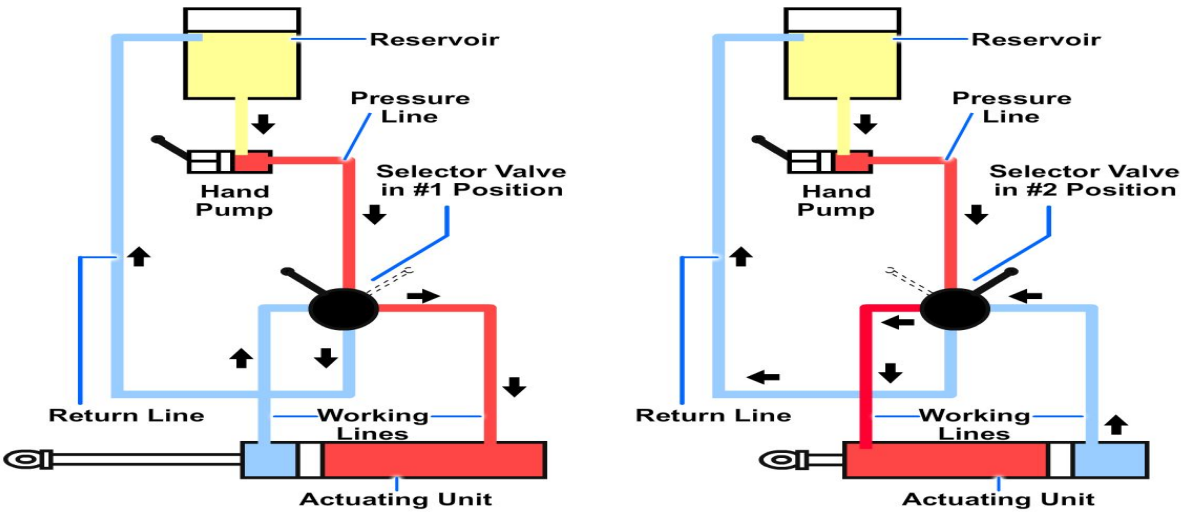

Figure 4-12 — Basic hydraulic system, hand-operated pump.

The reservoir provides storage for a supply of fluid for operation of the system. It replenishes the fluid of the system when needed, provides room for thermal expansion, and normally provides a means for bleeding air from the system.

The pump creates a flow of fluid. The pump in the pictured system is hand operated; however, aircraft systems have engine-driven or electric-motor driven pumps. There are two types used in naval aircraft—the piston type and the gear type. One aircraft may incorporate both types due to the requirements of the various hydraulic systems.

The selector valve directs the flow of fluid. These valves actuate either manually or by solenoid; they may operate directly, or they may operate indirectly with the use of mechanical linkage.

The actuating unit converts fluid pressure into useful work. The actuating unit may be an actuating cylinder or a hydraulic motor. An actuating cylinder converts fluid pressure into useful work by linear/reciprocating-mechanical motion. A hydraulic motor converts fluid pressure into useful work by rotary-mechanical motion.

In *Figure 4-12* you can trace the flow of hydraulic fluid from the reservoir through the pump to the selector valve. With the selector valve in the #1 position, fluid flow created by the pump is through the valve to the right-hand end of the actuating cylinder. Fluid pressure then forces the piston to the left. As the piston moves left, fluid on that side of the piston flows out, up through the selector valve, and back to the reservoir. With the selector valve in the #2 position, fluid from the pump flows to the left side of the actuating cylinder, reversing the process. You can stop piston movement at any time by moving the selector valve to neutral. In this position, all four ports close, and pressure is equal in both working lines.

Additions may be made to the basic system to provide additional sources of power, operate additional cylinders, make operation more automatic, or increase reliability. These additions are all made on the framework of the basic hydraulic system diagram shown in *Figure 4-12*.

Electrohydraulic Systems

There are two types of electrically controlled, hydraulically operated components: selector valves that start, stop, or change the direction of a fluid flow (similar to a switch in an electrical circuit); and control valves that schedule fluid flow (much like a potentiometer controls current flow). Each of these components is manufactured in varying degrees of complexity, depending on its use. Each manufacturer uses its own identification for its components, such as transfer valve, engagement valve, servo valve, etc.

Aircraft hydraulic systems normally operate at a pressure of 3,000 PSI; therefore, each component must be capable of operating at this pressure. You should observe all applicable safety precautions when working with high-pressure hydraulic or pneumatic systems.

Automatic Flight Control System (AFCS) provides automatic operation of flight control surfaces through electrical input and hydraulic control to maintain aircraft heading, altitude, and attitudes as selected by the pilot. There are many varieties of AFCS systems including both digital and analog systems such as the AN/ASW-31 analog and AN/ASW-60 Digital Computer System. For our purposes we will be referring to the analog AN/ASW-31 system.

Hydraulic Surface Control Booster System

The hydraulic surface control booster system contains both selector and control components. The AFCS engagement valve is a selector valve. It either applies pressure to or removes pressure from the AFCS portion of the booster. The hydraulic transfer valve controls the direction and amount of fluid to the booster system.

AFCS ENGAGEMENT VALVE – The AFCS engagement valve *(Figure 4-13)* is shown in disengage or relaxed position. No voltage is at the coil, and 3,000 PSI hydraulic pressure pushes the solenoid piston to the left. This action allows the hydraulic fluid to flow to the right side of the spring-loaded piston. With the same pressure on both sides, the spring-loaded piston moves to the left, preventing any further flow in the system.

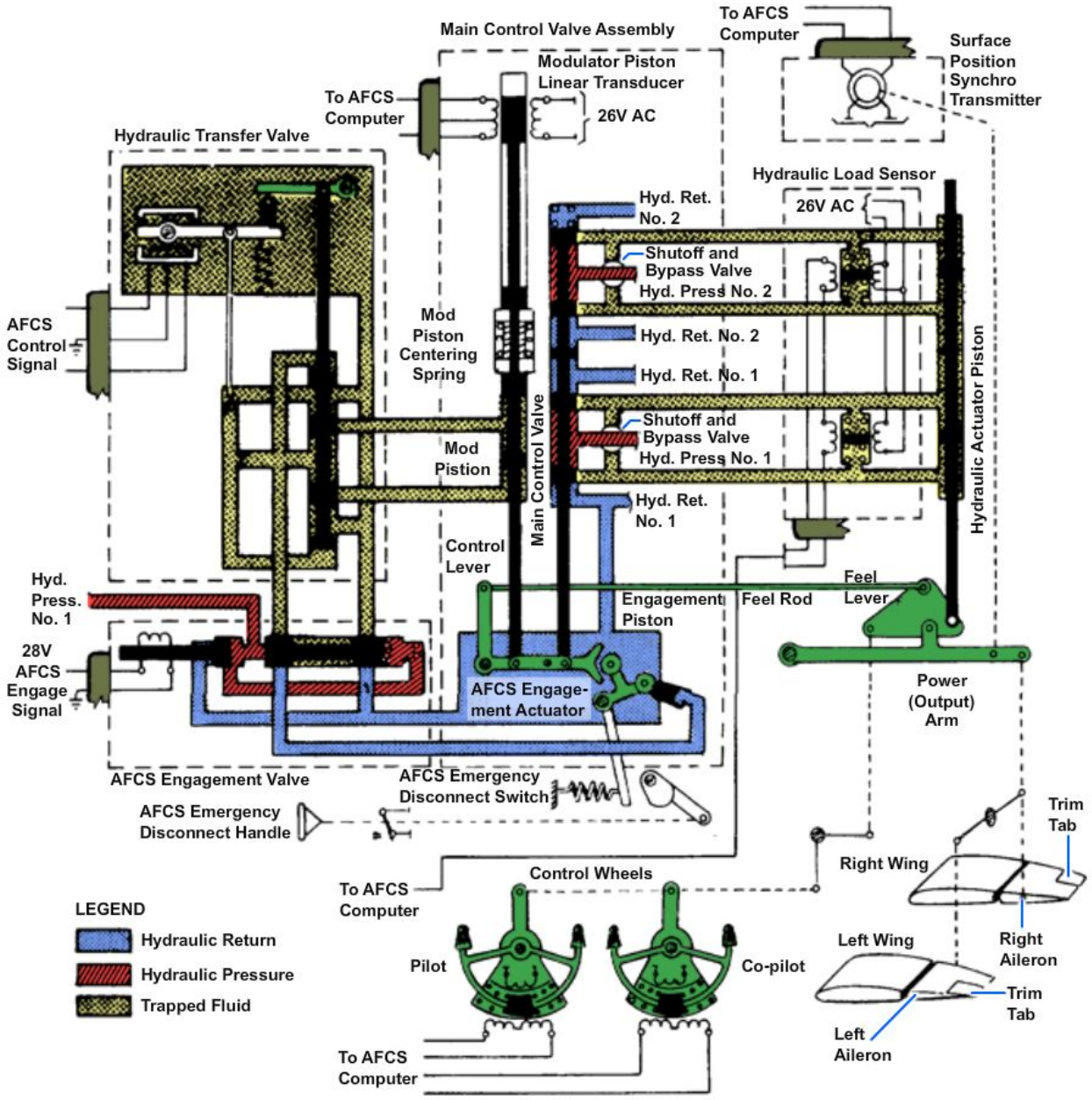

Figure 4-13 — Hydraulic surface control booster with no mechanical input and AFCS disengaged.

When AFCS engages *(Figure 4-14)*, a 28-volt dc signal goes to the solenoid coil to drive its piston to the right. This action relieves hydraulic pressure from the right side of the spring-loaded piston. This allows pressure on the left side to move the piston to the right, compressing the spring.

Hydraulic pressure then flows to the other AFCS components of the boost system.

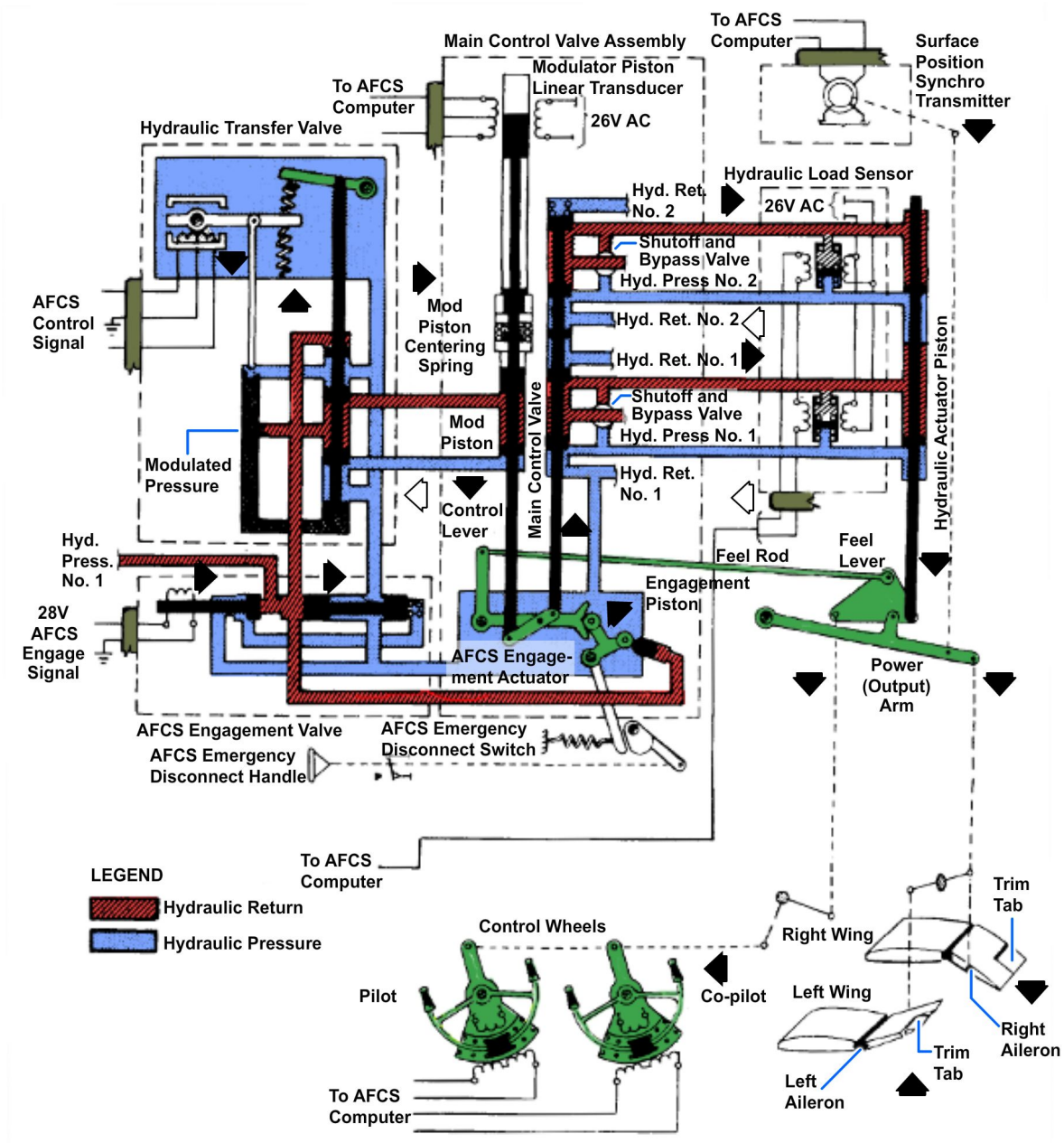

Figure 4-14 — Hydraulic surface control booster with no mechanical input and AFCS engaged.

Hydraulic Transfer Valve

With AFCS engagement, a dc control signal goes from the AFCS computer to the transfer valve. In the static state (zero signal), dc flow through the transfer valve coil is equal, and the plunger mechanism remains in the centered position (with help from the centering springs).

Hydraulic pressure from the engagement valve flows to the top land on the hydraulic transfer valve piston. Fluid also flows through a small orifice to the bottom land of the same piston. Pressure to the bottom of the piston is regulated by controlling the amount of fluid leaving the modulated pressure chamber. If chamber pressure is 1,500 PSI and one drop of fluid leaves the chamber for every drop that enters, the pressure remains constant. To increase pressure, an unbalanced dc voltage on the coil causes the

plunger to block the return orifice for an instant so more fluid enters the chamber than leaves. Conversely, an unbalanced dc signal from the AFCS computer that causes the plunger to rise for an instant lowers chamber pressure.

With a zero input signal from the AFCS computer, the transfer valve piston is in the centered position *(Figure 4-13)*. The pressure acting on the smaller surface area of the piston's upper land and the modulated pressure acting on the larger area of the piston's lower surface are in balance, keeping the piston centered.

With an electrical signal input, as shown in *Figure 4-14*, a higher pressure in the modulated chamber causes the piston to rise. This action allows fluid to flow to another component of the boost system. The larger the electrical signal input, the more pressure difference on the piston; therefore, the more fluid flow.

Booster System Operation

The booster operates in two separate modes—manual and AFCS. In the manual mode, control surface deflection desired by the pilot starts by a lateral movement of the control wheel *(Figure 4-13)*. This small movement of the control wheel transmits through the feel lever and feel rod to the control lever. The control lever is free to move about its pivot, and a centering spring holds the modulating piston in place. Movement of the control lever displaces the main control valve, porting fluid from two hydraulic systems to the hydraulic actuator piston. (The main control valve and hydraulic actuator work identically, whether in manual or AFCS modes.)

When the hydraulic actuator piston moves, both the feel lever and the power arm position the control surface and the control wheel to the position the pilot selects. The control surface moves faster as the pilot applies more pressure to the control wheel. The direction of the pressure determines the direction of control surface movement.

If there is no pressure at the control wheel, the main control valve centers *(Figure 4-13)*. Trapped fluid holds the hydraulic actuator piston in position.

The manual operation of the dual shutoff and bypass valves is from the flight station. If there is a loss of hydraulic pressure or a malfunction in the boost system, the flight crew pulls the handle. Operation of the valves shuts off hydraulic pressure to the hydraulic actuating piston and opens both working lines to each other. This prevents hydraulic lock in the actuator piston and allows control surface movement without the aid of the boost system.

Trapped hydraulic pressure in the modulator piston aids the mod piston centering spring in holding the piston centered. This allows positive control of the main control valve by the control lever.

Upon AFCS engagement, the engagement valve ports hydraulic fluid to the hydraulic transfer valve and to the engagement piston. Movement of the engagement piston locks the control lever in its centered position and prevents mechanical inputs from the control wheels. This piston can, however, be overpowered by about 15 pounds of force on the control wheel in an emergency.

Electrical inputs from the AFCS computer change to hydraulic fluid pressures in the hydraulic transfer valve, and the pressure controls the modulator piston. The modulator piston changes the hydraulic pressure into linear mechanical motion, which repositions the main control valve. Movement of the main control valve ports hydraulic fluid to the actuator piston to position the control surface and control wheel as previously described.

Electrical devices on the booster provide information inputs to the AFCS. The modulator piston linear transducer tells the AFCS the rate of control surface movement, and the surface position synchro transmitter provides position information. Read chapter 8 for more information about automatic flight control system operation.

Wing Flap Systems

The Wing Flap Systems are made up of the Wing Flap Asymmetry System and the Wing Flap Position Indicator System. They are installed for the detection and automatic arrest of asymmetry (unequal degree of extension) of the wing flaps and to indicate the amount of wing flap extension from 0 to 100 percent.

Wing Flap Asymmetry System

The Wing Flap system includes: two Wing Flap Asymmetry Detectors, one on each wing rear beam; a chain and cable system attached to each wing flap to drive the camshaft within the Asymmetry Detector; a Flap Asymmetry Dual Hydraulic Solenoid Valve Assembly (Wing Flap Asymmetry Shutoff Valve) in the hydraulic service center upstream of the main drive assembly; a Wing Flap Brake Assembly outboard of the actuator; a WING FLAP BRAKE RELAY in the hydraulic service center; a WING FLAP ASYMMETRY RELAY in the hydraulic service center; and a FLAP ASYM caution indicator on the center instrument panel in the flight station. On aircraft incorporating Airframe Change (AFC) 475, the WING FLAP ASYMMETRY LIGHT RELAY, the WING FLAP ASYMMETRY TEST/ RESET SWITCH, and the SHUTOFF VALVE TEST LIGHT are also located in the hydraulic service center.

NOTE

The cause of asymmetry must be determined and the trouble corrected before the reset operation can be accomplished.

Wing Flap Asymmetry Operation

The cable system in the wing rotates the independent switches at identical speed as long as the wing flaps move symmetrically. In normal operation, the cams in the Asymmetry Detectors are timed to operate the six switches in each Asymmetry Detector so that closure of a switch on one side never occurs while the corresponding switch in the other Asymmetry Detector is closed. In the event of a mechanical failure of a type which would allow only one flap to stop when the mechanism is in motion or only one to start when motion is initiated, corresponding switches in each Asymmetry Detector would be closed at the same time, completing a circuit through them to the WING FLAP ASYMMETRY RELAY which controls the WING FLAP BRAKE RELAY and the Wing Flap Asymmetry Shutoff Valve.

The Wing Flap Brake Relay completes the circuit to the Wing Flap Brake assemblies at the outboard actuators. This would immediately cutoff the hydraulic fluid supply to the main drive and the flaps would stop at the point of failure. Wing Flap Brake assembly engagement would prevent aerodynamic forces from retracting the flap with the broken line of drive. The Wing Flap Asymmetry Shutoff valve is self-latching and must be pressed to rearm the system.

Wing Flap Asymmetry Test/Reset Operation

The Wing Flap Asymmetry Test/Reset Switch will allow a confidence check of the Wing Flap Asymmetry Shutoff valve and Shutoff Valve Test light without tripping the Wing Flap Asymmetry system. At the hydraulic service center, the Wing Flap Asymmetry Test/Reset switch is set and held to TEST SHUTOFF VALVE. The circuit is completed to the Wing Flap Asymmetry Shutoff valve which shuts off hydraulic oil pressure to the Wing Flap Control valve. The circuit is also completed to the Shutoff Valve Test light and the FLAP ASYM caution indicator on the center instrument panel. The RESET position of the Wing Flap Asymmetry Test/Reset switch electrically will reset the Wing Flap Asymmetry relay after a tripped condition.

Wing Flap Position Indicator System

The system includes: one Wing Flap Position Transmitter located in the hydraulic service center and mounted on the Flap Drive Control Mechanism; and one Wing Flap Position Indicator located on the copilot instrument panel in the flight station.

Wing Flap Position Indicator System Operation

The Position Indicator, located on the copilot instrument panel, provides indications in percent of flap travel from 0 to 100 percent. With the Position Indicator pointer at T.O. & APPROACH (takeoff position), 77 percent of flap extension is indicated, and at LAND position, 100 percent of flap extension is indicated. The Position Indicator receives an electrical signal from a synchro transmitter located in the hydraulic service center on top of the Rudder Boost Shutoff Gearbox mounted atop the Flap Drive Control Mechanism. A splined shaft that extends from the Position Transmitter senses any movement of the wing flaps. As the Flap Drive Mechanism rotates, the Rudder Boost Shutoff Gearbox rotates, and the splined shaft of the Position Transmitter causes the synchro transmitter to send a signal to the Position Indicator, causing the Position Indicator pointer to maintain the exact wing flap position on the dial.

Wing Flap Asymmetry System Functional Signal Flow Description

The following paragraphs provide signal flow description shown in *Figure 4-15.*

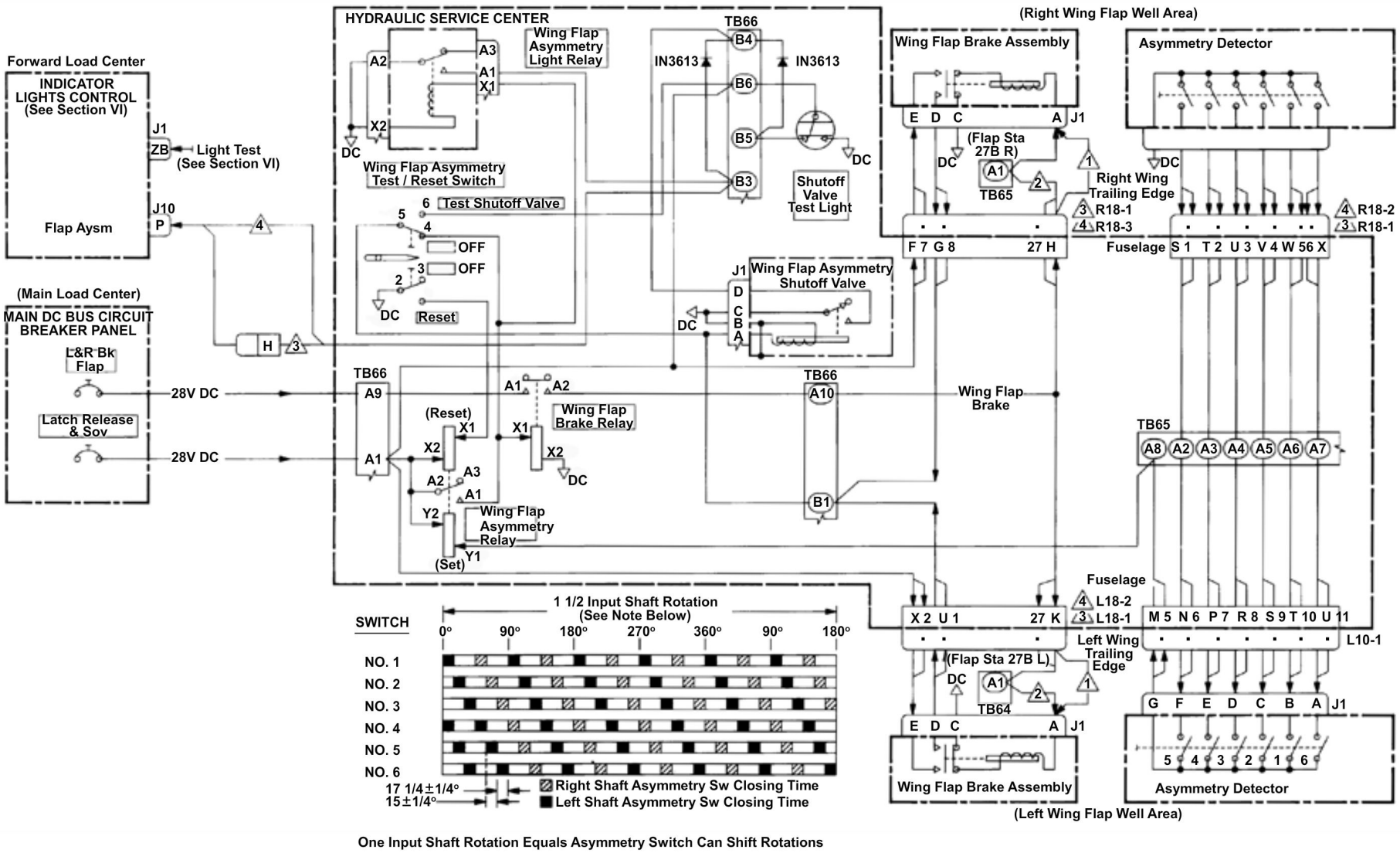

Figure 4-15 — Wing flap asymmetry system functional signal flow description.

The LATCH RELEASE & SOV circuit breaker on the MAIN DC BUS circuit breaker panel supplies the two coils (set and reset) of the WING FLAP ASYMMETRY RELAY with 28 vdc. Whenever the right and left wing flaps are extending or retracting asymmetrically with respect to each other, the WING FLAP ASYMMETRY RELAY is energized from switch contacts in the left and right wing Asymmetry Detectors. The closed contacts of the WING FLAP ASYMMETRY RELAY provide a path for 28 vdc from the LATCH RELEASE & SOV circuit breaker energizing the WING FLAP BRAKE RELAY, the WING FLAP ASYMMETRY LIGHT RELAY, and the Wing Flap Asymmetry Shutoff Valve, through the WING FLAP ASYMMETRY TEST/RESET SWITCH. The Wing Flap Asymmetry Shutoff Valve completes the ground return circuit to turn on the SHUTOFF VALVE TEST LIGHT and to the Indicator Lights Control to turn on the FLAP ASYM caution indicator on the center instrument panel.

With the WING FLAP BRAKE RELAY energized, 28 vdc from the L & R BK FLAP circuit breaker on the MAIN DC BUS circuit breaker panel is sent to the Wing Flap Brake Assemblies as a wing flap brake signal to actuate the solenoid. Each solenoid releases a locking mechanism, allowing a spring-loaded brake to set on their respective wing flap torque tube. The energized Wing Flap Asymmetry Shutoff Valve shuts off the hydraulic oil pressure and return lines to the wing flap drive motors. The WING FLAP ASYMMETRY LIGHT RELAY provides a parallel ground return path to turn on the FLAP ASYM caution indicator in case of a Wing Flap Asymmetry Shutoff Valve failure. The SHUTOFF VALVE TEST LIGHT remains off.

When set and held to TEST SHUTOFF VALVE, the WING FLAP ASYMMETRY TEST/RESET SWITCH routes 28 vdc from the LATCH RELEASE & SOV circuit breaker on the MAIN DC BUS circuit breaker panel to energize the Wing Flap Asymmetry Shutoff Valve. From the ground return inputs, both the FLAP ASYM caution indicator on the center instrument panel and SHUTOFF VALVE TEST LIGHT are turned on from the Wing Flap Asymmetry Shutoff Valve. The Wing Flap Brake Assemblies are not actuated.

The reset coil of the WING FLAP ASYMMETRY RELAY is energized by setting the WING FLAP ASYMMETRY TEST/RESET SWITCH to RESET. The Wing Flap Brake Assemblies and the Wing Flap Asymmetry Shutoff Valve must be reset manually.

Landing Gear System

Most naval aircraft have hydraulically actuated, electrically controlled, retractable landing gear. Normally, locking the landing gear in the retracted or extended position is automatic. *Figure 4-16* is an electrical schematic of the landing gear control circuit of a patrol type aircraft.

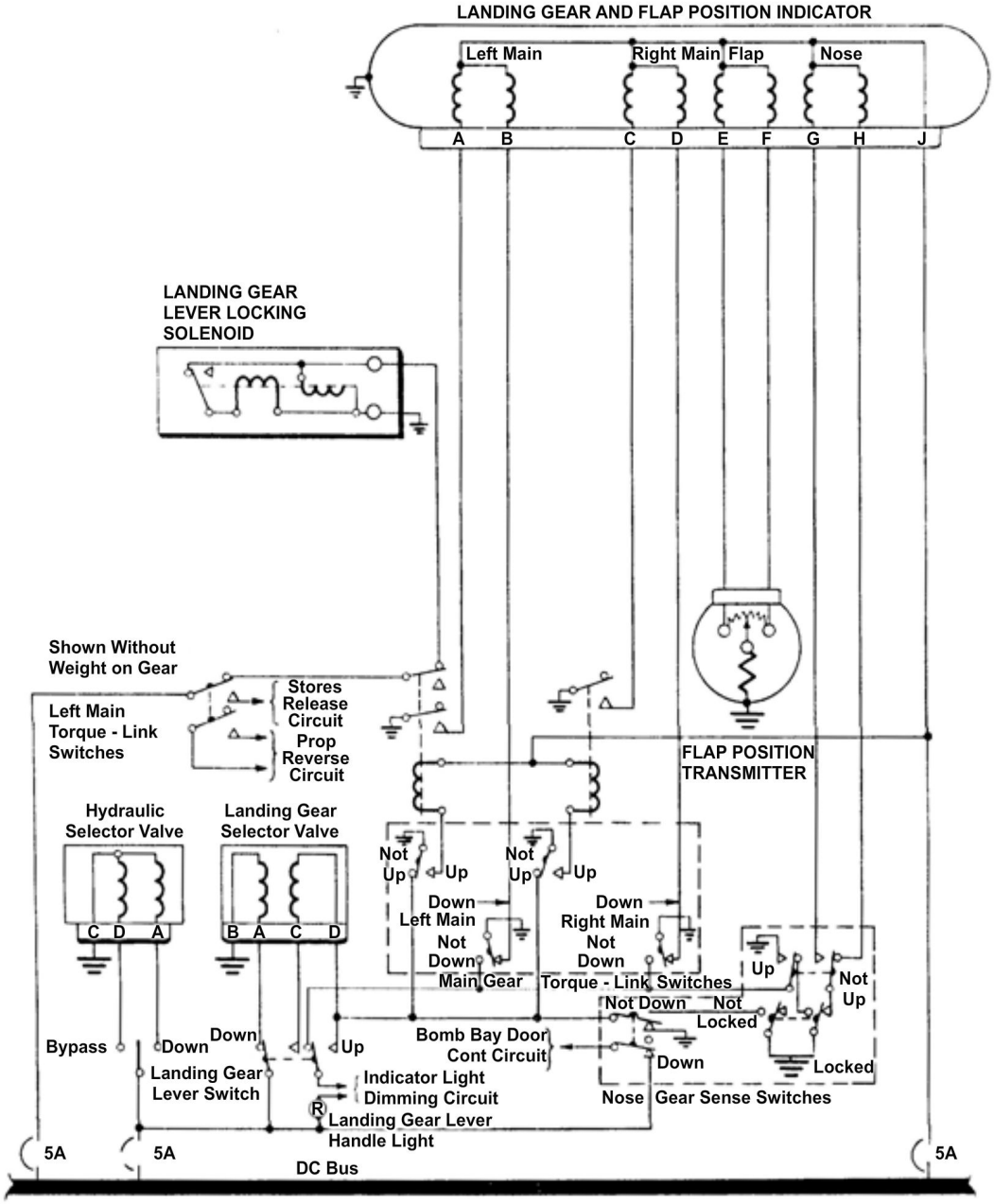

Figure 4-16 — Landing gear control circuit.

Circuit Operation

The landing gear circuit includes an electrical, solenoid-operated selector valve to control hydraulic actuation of the landing gear. Current goes to the landing gear selector valve through two single-pole, double-throw (SPDT) switches. These switches operate by a cam on the landing gear control lever, permitting current to flow to either the up or down coil of the valve. Coil selection depends on control lever position. The landing gear control circuit also includes electrical control for emergency extension of the nose gear with emergency hydraulic system power. A center-off switch (SPDT type) provides control of a double solenoid-actuated hydraulic selector valve. The center-off position of the switch is the normal position during operation of the landing gear with the main hydraulic system. The down position selects emergency hydraulic system power for nose gear extension. The bypass position is for use only during retraction of the nose

gear with main hydraulic power after extension by emergency hydraulic power. The bypass also allows for release of emergency system hydraulic pressure any time you desire.

Additional Circuits

In some aircraft, the landing gear control circuit also controls the supply of power to the propeller-reversing circuit (through left and right main torque-link switches) and to the stores release circuit (through left main torque-link switch). The left main gear torque-link switch supplies power to energize the landing gear lever locking solenoid. The weight of the aircraft must be off the landing gear shock strut before you move the landing gear control lever from the wheels down position. The solenoid will be de-energized by the up sense switch of the left main gear after the gear retracts. This switch energizes a relay, whose normally closed contacts are in series with the solenoid circuit. The left and right main gear torque-link switches (parallel connected) are in series with the power to the throttle lever-locking solenoid to prevent the throttles from being placed in reverse propeller range. When one of the torque-link switches actuates (by aircraft weight compressing one or both main landing gear strut oleos), the throttle levers come into the reverse pitch range. The left main landing gear torque-link switches (series connected) also open the stores release circuit. This prevents accidental release of wing station external stores when the weight of the aircraft has compressed the shock strut oleo.

A solenoid mechanically prevents movement of the landing gear control lever from the wheels down position when the aircraft weight is on the gear. When the weight of the aircraft is on the landing gear, this solenoid de-energizes, allowing the solenoid armature pin to protrude outboard. This solenoid armature pin position mechanically prevents movement of the landing gear control lever from the wheels down position. Depressing the solenoid armature pin allows control lever movement for emergency or test procedures.

Landing Gear Warning System

There are two types of visual warnings for the landing gear. One indicator is located in the pilot and copilot landing gear control levers and the other uses a flashing WHEELS indication on the pilot and copilot instrument panel. Additionally, on aircraft incorporating AFC 460, an aural indication is provided in the flight station (*Figure 4-17)*.

Landing Gear Control Lever Warning Indicators

The pilot and copilot Landing Gear Control Lever warning indicators come on by movement of the landing gear control lever. Selecting either UP or DN on the landing gear control lever closes a set of contacts on the Landing Gear Control Lever control switch. A ground supplied by either the uplock or downlock switches completes the circuit to the Indicator Lights Control, turning on the indicators.

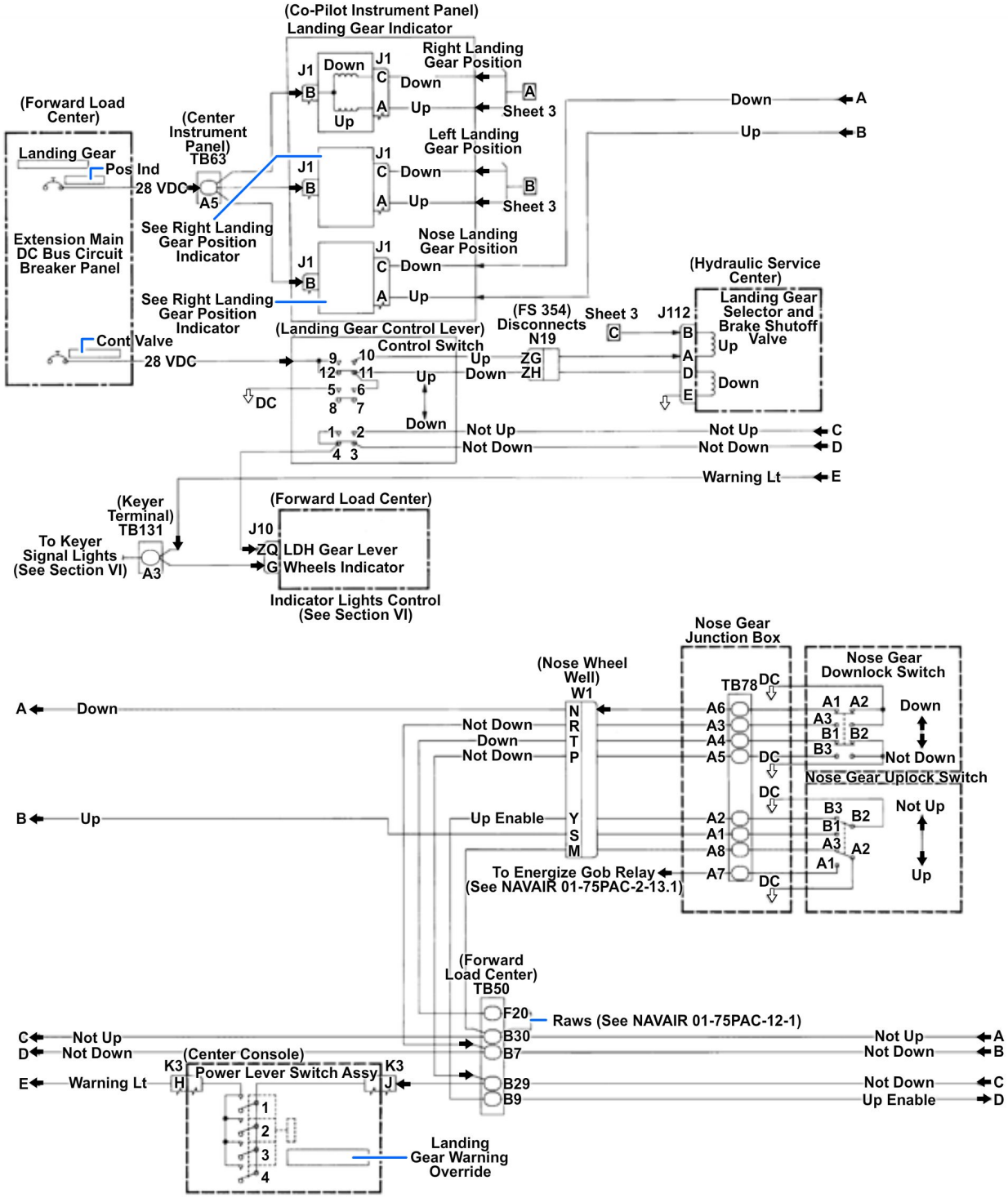

Figure 4-17 — Schematic for landing gear warning system

Landing Gear Wheels Warning Indicators

These flashing WHEELS indicators are controlled by the downlock switches and engine power lever switches. If the landing gear is up, or in transit and the engine power levers are set below cruise, a ground is applied to the Indicator Lights Control from the landing gear downlock switches, which start the indicators flashing. The WHEELS indicators may be cancelled by pressing the LANDING GEAR WARNING OVERRIDE pushbutton switch.

Landing Gear WHEELS Warning Indicators and Horn

On aircraft incorporating AFC 460, the flashing WHEELS warning indicators and Landing Gear Warning Horn are controlled by the downlock switches, Power Lever Switch Assembly, Power Lever Actuator and Switch Assembly, 142 Knot Airspeed Switch, 153 Knot Airspeed Switch, and Flap Handle Position Switch.

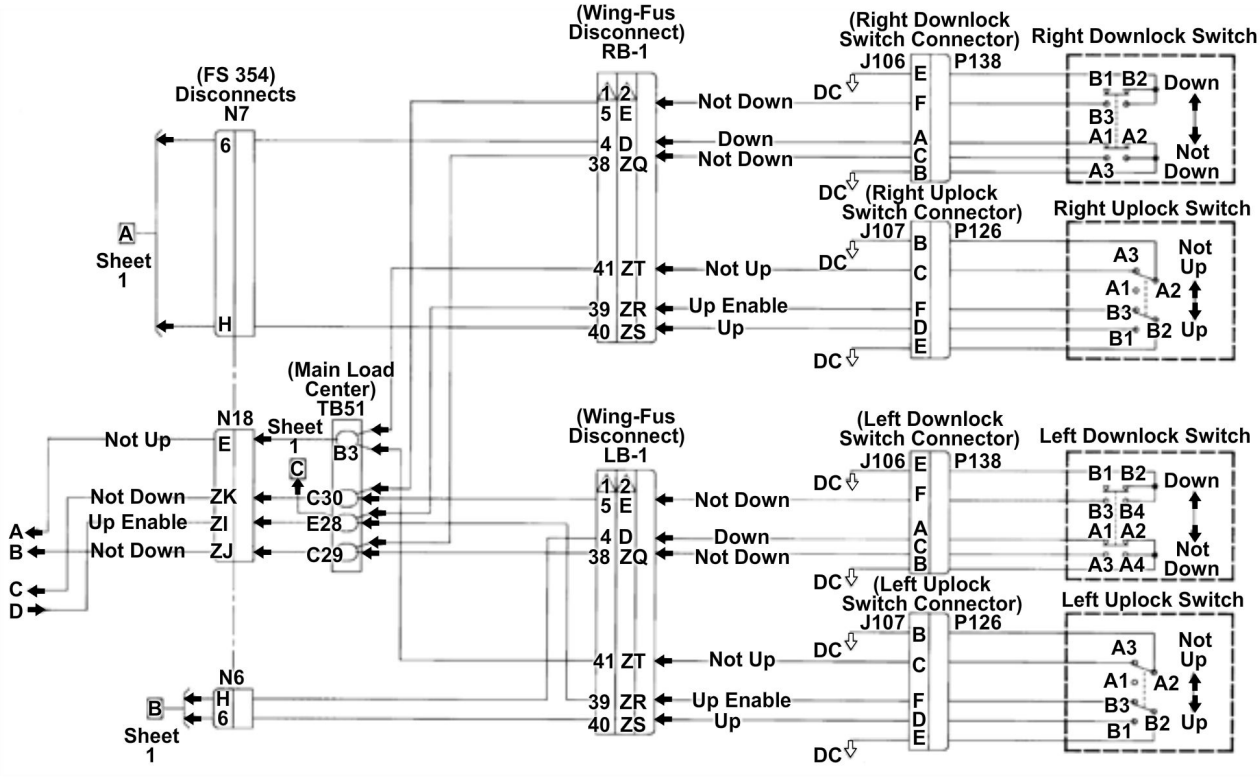

Figure 4-18 — Schematic for landing gear warning system.

Landing Flap Position Warning

On aircraft incorporating AFC 460, when the wing flap control lever is set to FLAPS DOWN, the flap handle position switch contacts are closed. A ground is supplied to sound the Landing Gear Warning Horn and start the WHEELS warning indicators flashing if the landing gear is not down and locked. This warning cannot be canceled using the LANDING GEAR WARNING OVERRIDE pushbutton switch.

Airspeed Switch and Power Lever Switch Warnings

On aircraft incorporating AFC 460, two conditions can initiate the landing gear warnings to sound the Landing Gear Warning Horn and flash the WHEELS warning indicators. The 153 Knot Airspeed Switch is in series with the 48 degree microswitches in the Power Lever Actuator and Switch Assembly and downlock switches to eliminate nuisance warnings during normal flight evolutions above 153 knots. Landing gear warnings below 153 knots but above 142 knots can be canceled by use of the LANDING GEAR WARNING OVERRIDE pushbutton switch. A second 142 Knot Airspeed Switch is in series with the 60 degree microswitches in the Power Lever Switch Assembly, which provides a landing gear warning that cannot be cancelled if the engine power levers are at or below FLT START and airspeed is below 142 knots with the landing gear up or in transit.

Landing Gear Position Indicators

Three indicators on the copilot instrument panel display UP when gear is retracted, striped (barber pole) when gear is in transit or power is not applied; or wheel symbol when gear is down. LANDING GEAR POSITION LEFT, NOSE, and RIGHT indicators are driven by grounds supplied by their respective uplock or downlock switches. Their 28 vdc power is supplied by the EXTENSION MAIN DC BUS circuit breaker panel LANDING GEAR POS IND circuit breaker.

Arresting Gear System

The arresting gear system stops the aircraft during carrier landings and emergency field arrestments. The primary component of the system is the arresting hook on the underside of the aft fuselage. The hook is pivoted at the forward end allowing up, down, and sideways motion. The hook engages a runway or cross deck pendant when in the down position. A lever in the crew station controls raising and lowering of the hook *(Figure 4-19)*. The lever electrically energizes a hydraulically actuated vertical damper cylinder for hook retraction and trips an uplatch mechanism through mechanical linkage for lowering the hook. Two horizontal dampers and one vertical damper dampen hook motion from deck impact forces. Two centering spring assemblies maintain the hook in the center position.

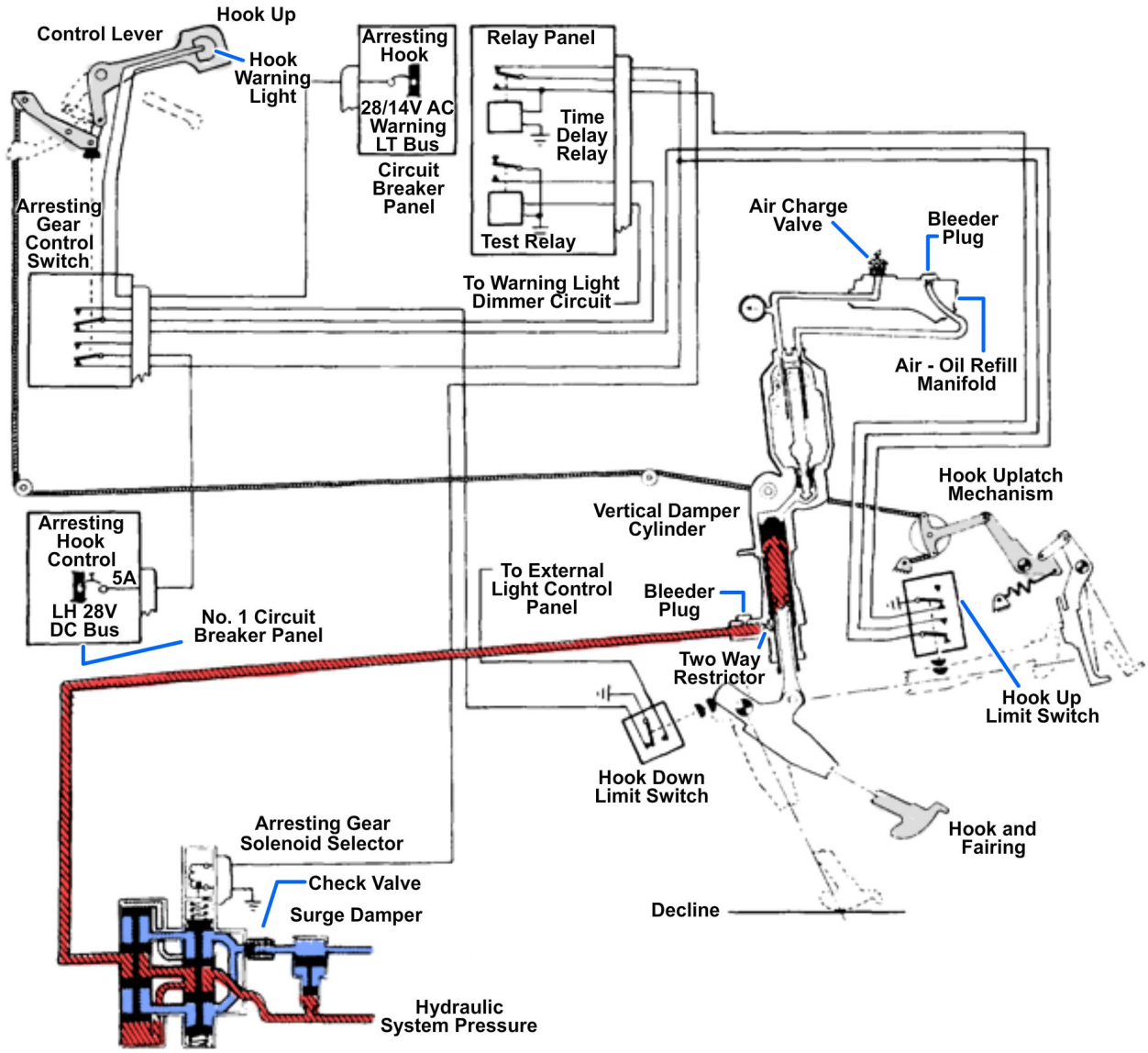

Figure 4-19 — Arresting gear control and indicating system.

Extension

The arresting hook is extended by moving the control handle in the crew station from the up to the down position. This removes tension from the cable and allows the uplatch mechanism to deflect to the opposite extreme of travel (aft). The arresting hook is then free to extend by action of the vertical damper cylinder and its own weight. At the same time, a switch in the control handle actuates, de-energizing both the arresting hook relay and the selector valve solenoid. This action permits fluid from the vertical damper cylinder to return. The surge damper prevents return line high pressure surges, caused by hook extension, from damaging other subsystems by reducing the surge.

Retraction

Moving the crew station lever from the down to the up position puts tension back onto the cable. This action moves the uplatch mechanism forward to receive the arresting hook and latch it in the retracted position. As the lever is brought up, a switch in the lever mechanism actuates, sending current through the de-energized arresting hook relay to energize the selector valve solenoid. Hydraulic pressure then goes to the vertical damper cylinder to raise the hook. When the hook reaches the retracted position, it actuates the up limit switch, which completes the circuit, energizing the arresting hook relay. This, in turn, breaks the circuit to the selector valve solenoid and stops the flow of hydraulic fluid to the vertical damper. The arresting hook relay has a 1.1 second time delay to assure the hook is up and locked before removal of hydraulic pressure.

Nosewheel Steering System

The nosewheel steering system (*Figure 4-20*) is an electrically controlled, hydraulically operated system. It provides a nonlinear relationship between the rudder pedals and the angular position of the nosewheel. The system provides the pilot with adequate directional control of the aircraft during ground operation. It consists of a hydraulic steer-damp unit, solenoid-operated shutoff valve, command potentiometer, steering feedback potentiometer, steering amplifier, and an electrical control system. Control of the electrical power to the system is through either of the ground safety switches on the left or right main landing gear. The landing gear handle switch, a push-button switch on the pilot's stick grip, and the rudder pedals also control electrical power.

When the steering system electrical circuits energize, the steering system aligns for steering operation. At this point, the solenoid-operated hydraulic shutoff valve opens to supply fluid to the steering actuator. Simultaneously, all related circuitry for controlling the steering servo valve activates. The electrical section of the steering system is essentially a bridge circuit. One side of the bridge circuit runs through the command potentiometer; the opposite side runs through the feedback potentiometer. Output of each potentiometer goes to the steering system amplifier. Amplifier output currents flow to the hydro-mechanical servo valve coils, and the net signal actuates the servo valve, causing nosewheel steering action.

During operation, the nosewheel steering system attempts to maintain symmetry of the electrical bridge circuit. The circuit is symmetrical when both potentiometers supply equal voltages to the amplifier and the servo valve is at a null position. The bridge circuit becomes unbalanced when initiating a turn request by the repositioning of the command potentiometer wiper. Current differential in the servo valve windings reflects an unbalanced bridge circuit. Movement of the servo valve ports hydraulic pressure to the appropriate side of the actuator piston to cause the nosewheel to turn.

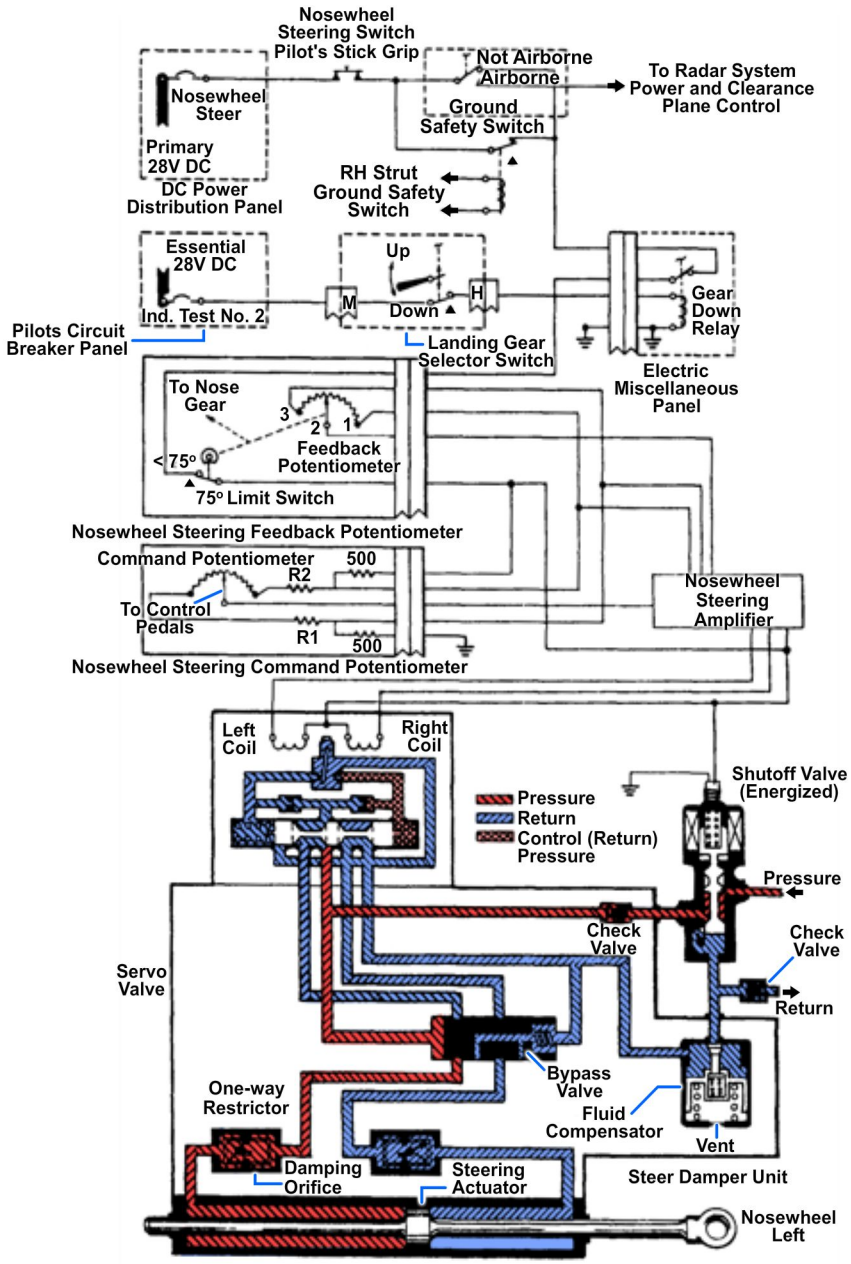

Figure 4-20 — Nosewheel steering system.

Steer-Damper Unit

The steer-damper unit is an electrically controlled, hydraulically operated package on the nose gear strut assembly. The unit provides both nosewheel steering and the required shimmy damping effect. The package consists of a check valve, servo valve, bypass valve, two unidirectional restrictors, the steering actuator, and fluid compensator.

The check valve prevents reverse flow from the unit to the shutoff valve. The servo valve controls the actuator position by controlling fluid flow to and from the actuator in response to signal variations from the amplifier. The bypass valve closes off the

interconnecting passages between both ends of the actuator whenever hydraulic pressure is available to the unit. This permits the actuator to act as a steering unit instead of a damping unit. The unidirectional restrictors provide a restricted reverse flow to dampen nosewheel shimmy. The steering actuator is a balanced piston-type hydraulic actuator, which provides the force to turn the nosewheel. Also, with the restrictors, the steering actuator provides the shimmy damper action. The fluid compensator is in the return passage in the unit and traps a quantity of fluid at 40 to 100 PSI. The compensator supplies fluid to the actuator through the bypass valve and the restrictor when the unit is being used as a shimmy damper, and extra fluid is necessary to prevent cavitation of the actuator. Since the compensator traps fluid in the actuator, it includes thermal relief provisions to prevent excessive pressure buildup within the steer-damper unit.

Shutoff Valve

The steering shutoff valve is a three-way, two-position, normally closed, solenoid-operated valve. The valve controls hydraulic system pressure to the steer-damper unit. When the valve de-energizes, fluid flow is cut off from the steerdamper unit. When the valve energizes (during normal steering or arrested landings), pressure flows to the check valve, bypass valve, and servo valve in the steer-damper unit.

Command Potentiometer

The steering system has a rotary-type, pedal-position (command) potentiometer. This potentiometer mechanically links to, and is driven by, the rudder pedals. It provides a nonlinear steering response. The potentiometer sends a signal to the nose gear steering amplifier showing the degree and direction of turn commanded by the pilot. Moving the potentiometer, with the steering system operating, unbalances a bridge circuit causing the steering amplifier to signal the servo valve to turn the nosewheel.

Feedback Potentiometer

The steering feedback potentiometer assembly consists of a potentiometer that attaches to and is driven by the drive arm on the nose gear spindle. As the nose gear moves in response to the pilot’s command, the feedback potentiometer feeds back a signal to the steering amplifier. When the feedback potentiometer signal matches the command potentiometer signal, the amplifier output causes the servo valve to neutralize and stop movement of the nosewheel. The feedback potentiometer assembly contains a swivel disconnect switch, which opens when the nosewheel turns 750 to 800 either side of straight ahead. This action electrically de-energizes the circuit to prevent reverse steering or damage to the aircraft.

Amplifier

The steering amplifier is a small transistorized differential amplifier. The amplifier detects the differential positions of the command potentiometer and the steering feedback potentiometer. Any difference in signals received results in a signal going to the servo valve to port hydraulic pressure to the steering actuator. This causes the nosewheel to turn and the steering feedback potentiometer to move. When the feedback potentiometer signal matches the command potentiometer signal, the nosewheel stops turning. In addition, the amplifier contains a circuit that provides a centering signal, which holds the nosewheel in the straight-ahead position during arrested landings.

Operation

When the nosewheel steering switch button is depressed, power goes to the electrical control system and the solenoid-operated shutoff valve. As the valve opens, hydraulic pressure flows to the servo valve on the steer-damper unit. Signals go to the amplifier from the command potentiometer and from the feedback potentiometer on the steering linkage. If these signals are equal, the amplifier signals the servo valve to stay in the neutral position. When the nosewheel (and consequently the feedback potentiometer) does not correspond to rudder pedal position (and command potentiometer), the signals going to the amplifier are different. This causes the amplifier to send a signal to the servo valve.

The signal sent to the servo valve causes the valve to port pressure to the steering actuator in the steer-damper unit. The hydraulic pressure causes the actuator to move the nosewheel (and the feedback potentiometer) to a position corresponding to rudder pedal position (command potentiometer). When the nosewheel reaches a position corresponding to the pedal position, the signals to the amplifier are equal. The amplifier now signals the servo valve to a neutral position. When the servo valve goes to a neutral position (with the steering system energized and hydraulic pressure available), it blocks off both pressure and return passages to the steering actuator. Thus, the actuator is hydraulically locked in position. The steering actuator will remain locked in position until the servo valve receives a signal to turn the wheel or hydraulic and/or electrical power is removed from the system. When the steering system is not in use, the steer-damper unit performs the functions of a shimmy damper. The system accomplishes shimmy damping by trapping hydraulic fluid on both sides of the steering actuator piston and forcing this fluid from one side of the actuator to the other side through the restrictor.

Catapulting System

The catapulting system *(Figure 4-21)* provides catapult handling and attachment capabilities for carrier operations. The system consists of a catapult launch bar, a launch bar actuating cylinder and gimbal, swivel joints, a crew station controlled selector valve, leaf centering spring, leaf retracting springs, and a catapult tension bar socket. The launch bar is swivel mounted on the nose gear outer cylinder and can extend and retract during taxi operations. The launch bar automatically retracts after catapulting. A launch bar warning light comes on during any of the following conditions:

- The launch bar control switch is in EXTEND.
- The selector valve is in bar extend position (solenoid A energized).
- The launch bar is not up and locked with weight off the landing gear.
- The launch bar control switch is in RETRACT and the launch bar actuator is not up and locked.

Accessories for the catapulting system include a tension bar and a catapult holdback bar. The catapult tension bar socket mounts on the nose gear axle beam and provides for attachment of the tension bar for tensioning the aircraft before catapulting.

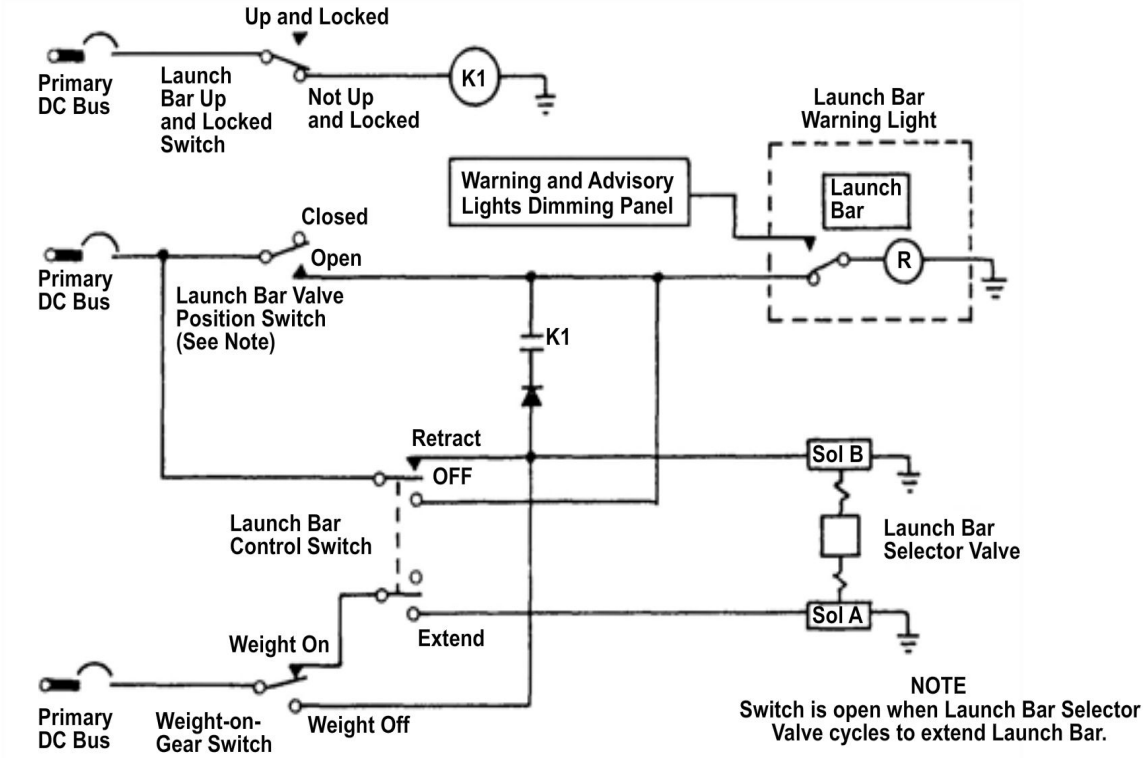

Figure 4-21 — Catapulting system control and indicating system.

Placing the launch bar control switch in EXTEND completes a power circuit through the weight-on-gear switch, applying 28-volt dc to the launch bar selector valve extend solenoid (solenoid A). The launch bar valve position switch also completes a circuit through its closed contacts to apply 28-volt dc to the launch bar warning light. The warning light comes on and remains on as long as the switch is in EXTEND. When the selector valve actuates, hydraulic pressure extends the launch bar actuator. A plunger on the end of the valve mechanically actuates the launch bar valve position switch. Switch actuation completes a parallel circuit to the warning light. When the control switch is in the OFF position, with weight on the landing gear, the warning light should go off. If the control switch is in RETRACT, the warning light should come on until the launch bar is up and locked. If the light remains on, the selector valve did not cycle from the bar extend position, and pressure is still on the launch bar actuator extend side.

The hydraulic pressure to the launch bar actuator unlocks locking fingers inside the actuator and extends the actuator to lower the launch bar. As the locking fingers unlock, they close the contacts of the launch bar up-lock switch inside the actuator. After catapulting, the weight-on-gear switch moves to the weight-off position. This applies 28-volt dc to the launch bar selector valve retract solenoid (solenoid B) and to the launch bar warning light through the energized contacts of relay K1. K1 remains on until the launch bar is up and locked. Power to the launch bar selector valve retract solenoid provides automatic hydraulic retraction and locking of the launch bar after catapulting. The launch bar actuating cylinder, locking in the fully retracted position, de-energizes K1, turning off the launch bar warning light. The approach light circuit goes through de-energized relay K1, giving an additional indication that the launch bar is up and locked.

The launch bar control switch goes to RETRACT and is held thereto retract the launch bar hydraulically. This completes a power circuit to apply 28-volt dc to the launch bar selector valve retract solenoid (solenoid B). The energized selector valve directs hydraulic pressure to retract the launch bar. The control switch returns to OFF when released, de-energizing the selector valve.

Speed Brake System

Speed brakes are moveable control surfaces used for reducing the speed of aircraft. Some manufacturers refer to them as *dive brakes*, others call them *dive flaps*. On some aircraft, they are on the sides or bottom of the fuselage; on others they attach to the wings. Regardless of their location, speed brakes serve the same purpose on all aircraft, they keep the speed from building up too high in dives. They can also slow down the speed of aircraft preparing to land. Speed brakes have electrical control and hydraulic operation. *Figure 4-22* shows a typical speed brake system, and you should refer to it while reading this section.

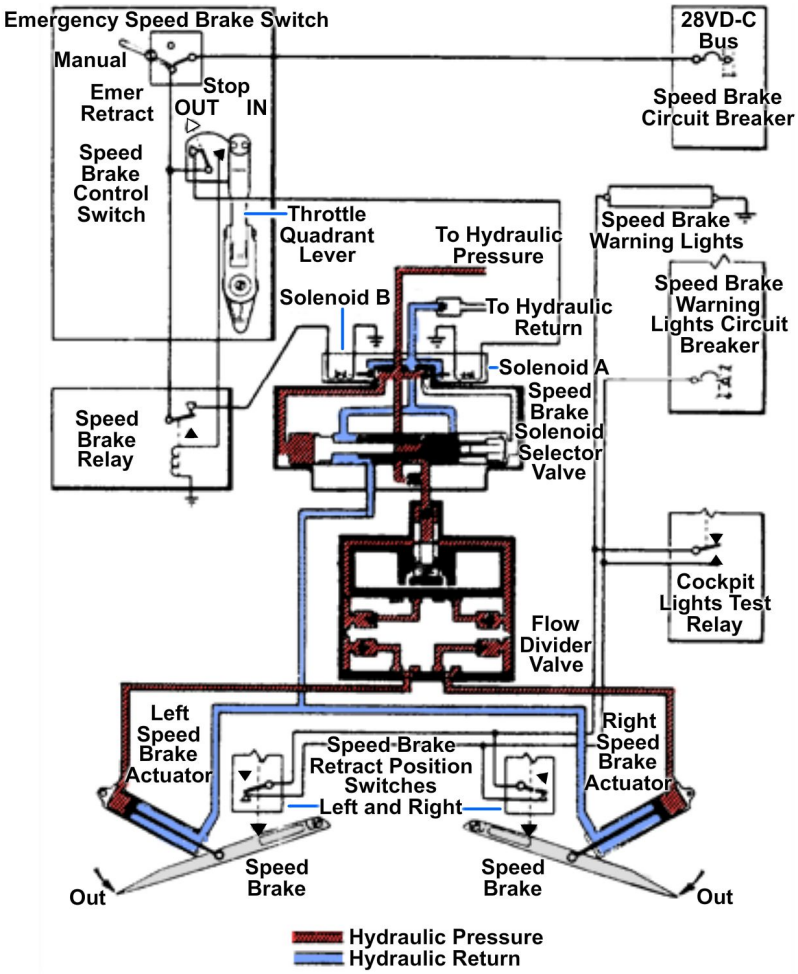

Figure 4-22 — Speed brake system.

> **NOTE**
>
> *Figure 4-22* shows the speed brake control switch being held in the OUT position. This allows hydraulic pressure to port to the extend side of the speed brake actuators, forcing the speed brakes to the extend position.

Extension

Extension of the speed brakes is done by placing the speed brake control switch (located on the throttle lever grip) to the OUT position. The OUT position is a momentary contact position, the switch being spring loaded to return to STOP when released. Holding the control switch in the OUT position energizes both selector valve solenoids (solenoids A and B). This action connects hydraulic pressure to the actuator extend side and connects the return to the actuator retract side. Any desired brake position may be attained and will be held by a hydraulic lock within the selector valve. The speed brake out warning light illuminates when either the left or right speed brake is not fully retracted. The warning light circuit completion is through either the left or right speed brake retract position switch.

Retraction

In normal operation, the speed brakes retract by moving the speed brake control switch to the IN position. This de-energizes solenoid A by removing the power to the solenoid and energizes the speed brake relay. The action of the speed brake relay removes the power from solenoid B.

With both selector valve solenoids de-energized, the selector valve permits pressure flow to the retract side of the speed brake. It also allows return flow from the extend side to the hydraulic return. The speed brake warning light goes out when both speed brakes are in the fully retracted position.

Emergency Retraction

To accomplish emergency speed brake retraction, place the emergency speed brake switch in the EMER RETRACT position. This switch de-energizes solenoids A and B of the selector valve (normal solenoid positions for retracting the speed brakes), which connects both the extend and retract sides of the speed brake actuators to the system return. With the removal of hydraulic pressure, the speed brakes are shut by the airstream. This action is necessary only if the speed brake relay does not energize when the speed brake control switch is in the IN position. If an electrical failure (such as a popped circuit breaker) occurs with the speed brakes extended, retraction is the same as actuation of the emergency retract switch.

Canopy System

Solenoid valves have many applications in naval aircraft. The canopy hydraulic system shown in *Figure 4-23* is an electrohydraulic system using a solenoid selector valve. The canopy selector valve is a four-way, two-position spool valve, which actuates either electrically or manually.

The canopy system consists of a sliding canopy mounted over the crew station area and the components required for normal operation and emergency jettison of the canopy. The entire system is hydraulically operated except for the electrical canopy jettison device. Hydraulic power for operation of the canopy is from either the combined hydraulic system or the hand pump system.

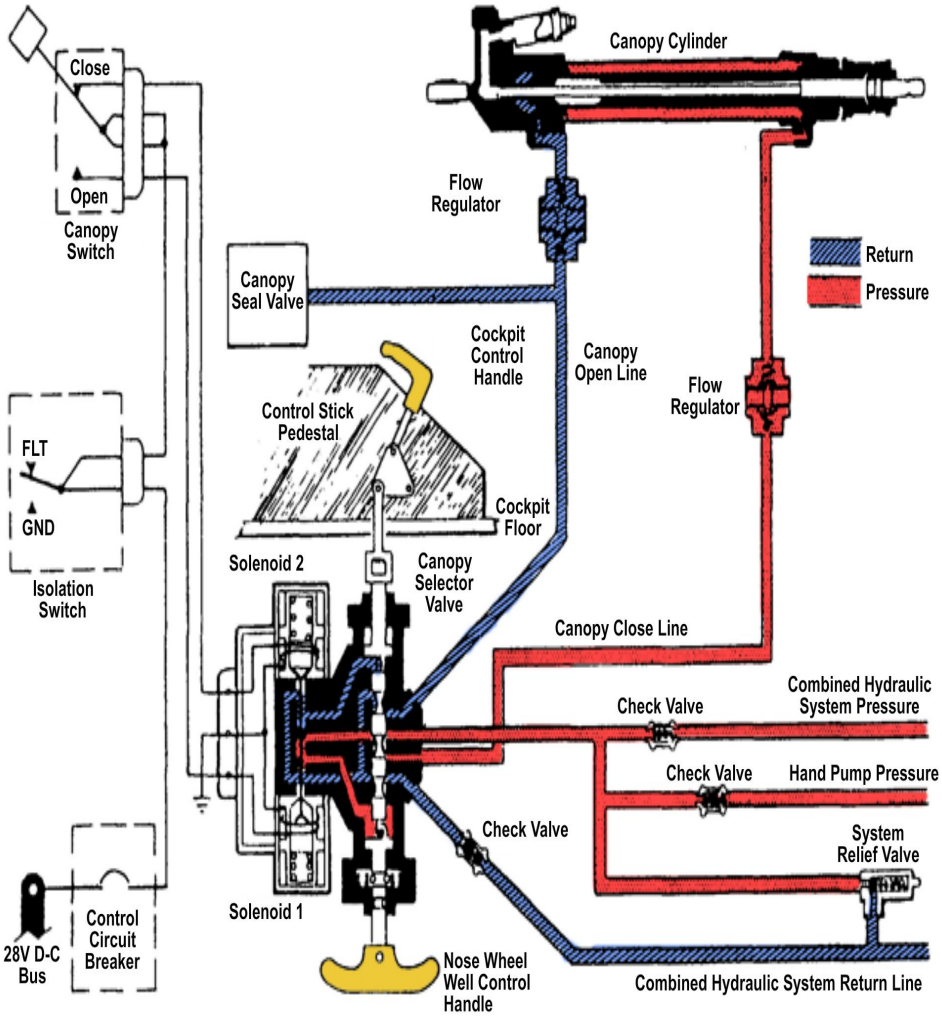

Figure 4-23 — Canopy system.

When a canopy switch is in the CLOSE position, it completes a circuit from the 28-volt dc bus to a terminal on the isolation switch. Current flows from the terminal, through the closed contacts of the canopy switch, to solenoid 2 of the canopy selector valve. The selector valve then energizes to the close position. Now, hydraulic pressure from either the combined hydraulic system or the hand pump system flows through the selector valve into the canopy close line. Pressure through a flow regulator to the rod end of the canopy actuating cylinder causes the piston and rod to retract closing the canopy.

When the canopy switch is in the OPEN position, power flows from the 28-volt dc bus through the control circuit breaker, the isolation switch terminal, the opposite contacts of the canopy switch, to solenoid 1 of the canopy selector valve. The selector valve energizes to the open position, reversing the sequence of pressure and return flow. Hydraulic pressure flows through the canopy open line to the canopy seal valve and hydraulically trips the seal valve. Thus, the air pressure in the canopy seal is dumped, allowing the seal to deflate. Pressure in the canopy open line continues its flow through a flow regulator to the back head end of the cylinder. This action extends the cylinder, opening the canopy. Hydraulic fluid in the opposite end of the cylinder returns through the canopy close line to the selector valve, across the valve, and into the combined hydraulic system. Fluid then returns to the main reservoir of the system.

For canopy jettison *(Figure 4-24)*, the emergency canopy jettison switch, or either of the two emergency outside jettison switches initiates a firing circuit. Closing any of the three switches completes the circuit to the electrically fired canopy jettison cartridge on the canopy cylinder back head end. The cartridge discharges through the canopy cylinder, causing the canopy to jettison.

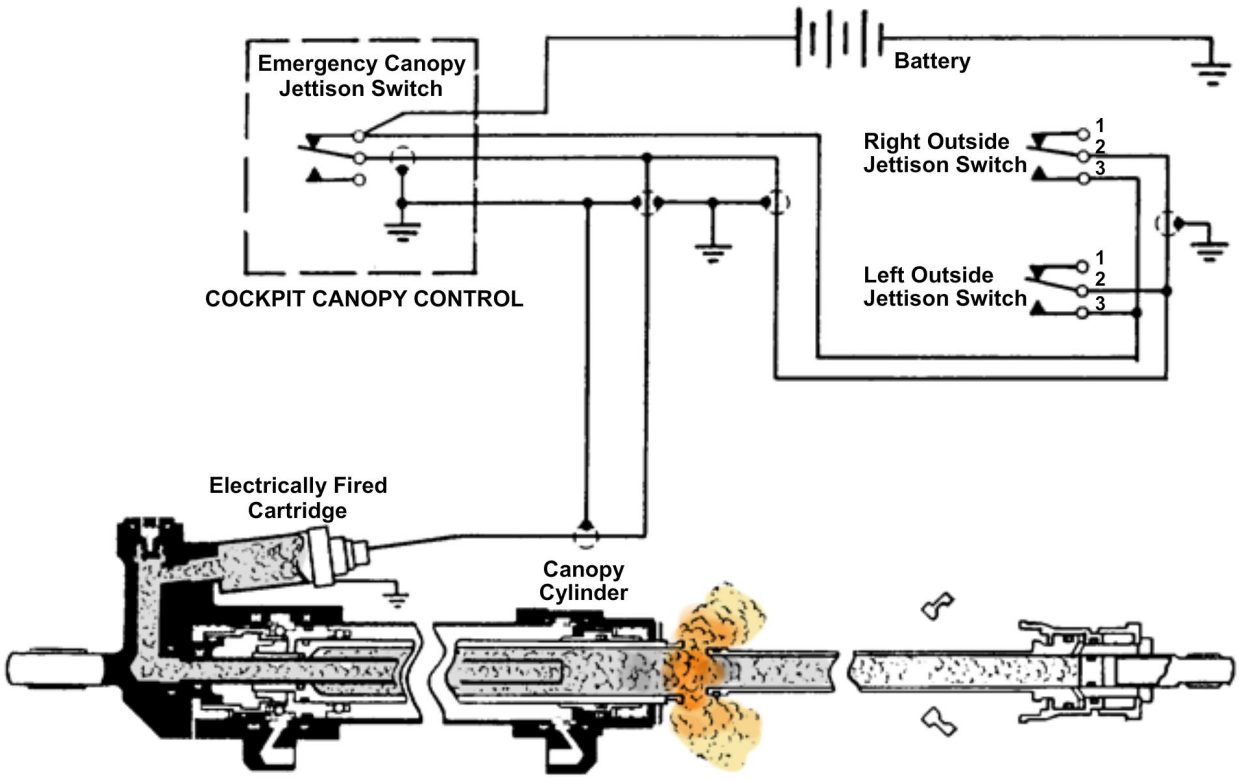

Figure 4-24 — Canopy jettison.

Pneumatic Power System

The pneumatic power system supplies compressed air for various normal and emergency pneumatically operated systems. The compressed air is held in storage cylinders in the actuating systems until required by actuation of the system. These cylinders and power system manifold receive an initial charge of compressed air or nitrogen from an external source. In flight, the air compressor replaces the pressure and volume lost through leakage, thermal contraction, and system operation.

The air compressor receives supercharged air from the engine bleed air system. This ensures an adequate air supply to the compressor at all altitudes. The air compressor is driven by an electric or a hydraulic motor. The system under discussion in this chapter is hydraulically driven. (*Figure 4-25*)

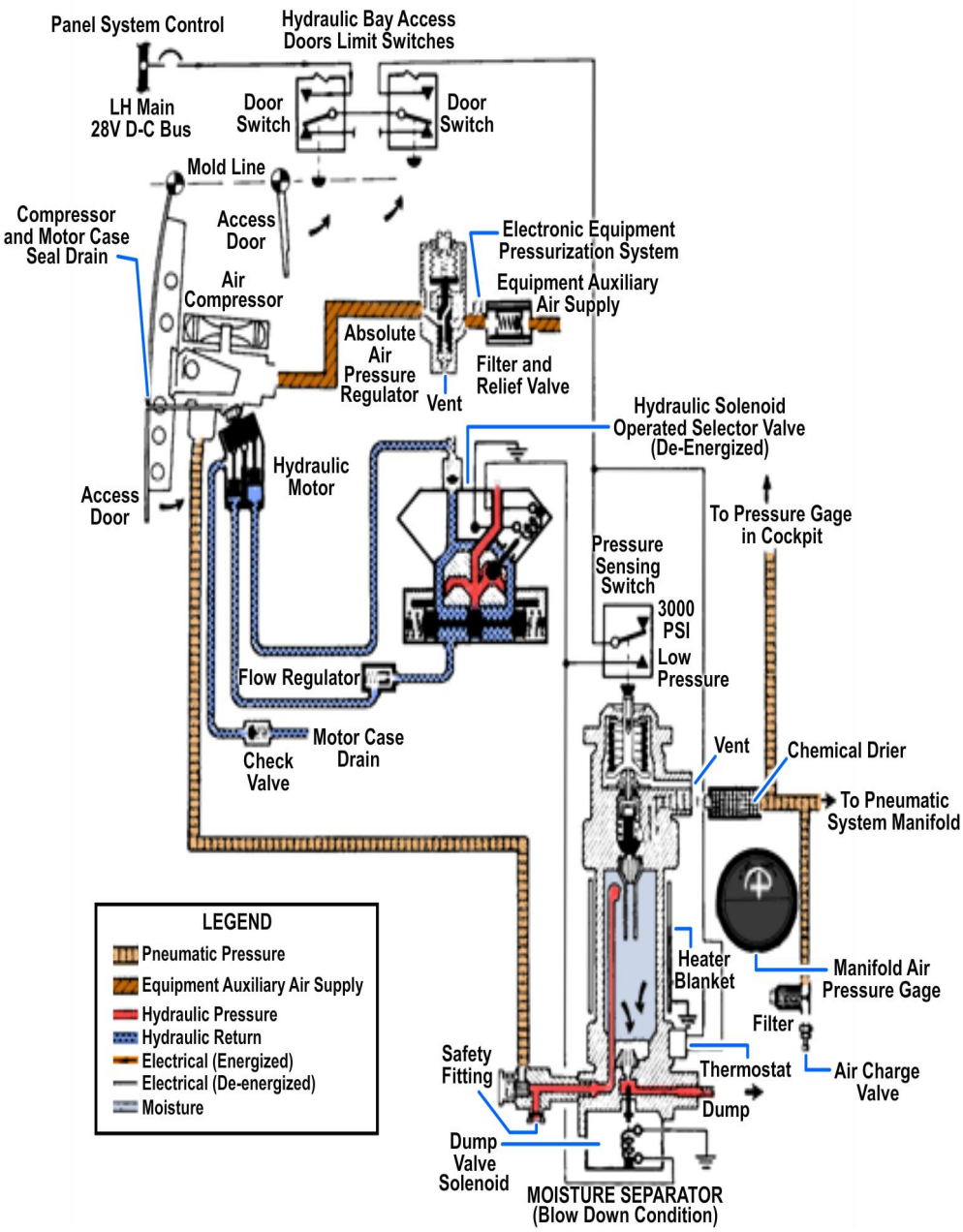

Figure 4-25 — Pneumatic system.

The aircraft hydraulic system provides power to operate the hydraulic-motor-driven air compressor. The air compressor hydraulic actuating system consists of a solenoid-operated selector valve, flow regulator, hydraulic motor, and motor bypass line check valve. When energized, the selector valve allows the system to pressurize and run the hydraulic motor. When de-energized, the valve blocks off hydraulic pressure, stopping the motor. The flow regulator compensates for the varying hydraulic system flow and pressures by metering the fluid flow to the hydraulic motor. Thus, excessive speed variation and/or overspending of the compressor is prevented. A check valve in the motor bypass line prevents system return line pressure from entering the motor and stalling it.

The air compressor is the pneumatic system's pressurizing air source. The compressor activation or deactivation is by the manifold pressure sensing switch, an integral part of the moisture separator assembly.

The moisture separator assembly is the pneumatic system's pressure sensor-regulator and relief valve. The manifold pressure switch governs air compressor operation. When manifold pressure drops below 2,750 PSI, the pressure sensing switch closes, energizing the separator's moisture dump valve and hydraulic selector valve, activating the air compressor. When manifold pressure reaches 3,150 PSI, the pressure sensing switch opens, de-energizing the hydraulic selector valve, deactivating the air compressor and dump valve. The deactivated dump valve vents overboard any moisture in the separator. The separator includes a thermostat and heating element. The thermostatically controlled wraparound blanket heating element prevents moisture from freezing within the reservoir in low-temperature atmospheric conditions.

The safety fitting at the moisture separator inlet port protects the separator from internal explosions due to hot carbon particles or flames that the air compressor may emit. A chemical drier further reduces the moisture content of the air emerging from the moisture separator.

An air charge valve provides the entire pneumatic system with a single external ground servicing point. An air pressure gauge, near the air charge valve, is for servicing the pneumatic system. This gauge shows manifold pressure. The ground air charge line air filter prevents entry of particle impurities into the system from the ground servicing power source.

AIRCRAFT ENVIRONMENTAL SYSTEMS

The proper operation of today's aircraft requires maintaining a proper environment not only for personnel but also for equipment on board. Similarities exist in the electronic equipment controlling these systems and the components within these systems.

The environmental systems on most aircraft include crew station/cabin air conditioning and pressurization, equipment cooling, windshield anti-icing and defogging, and equipment pressurization systems. Some aircraft accomplish equipment cooling by routing additional ducting from the crew station/cabin system; other aircraft use a separate cooling system. These systems are not the exclusive responsibility of the AE, but rather are the responsibility of other ratings with the AE assisting.

Terms and Definitions

The Air Conditioning System conditions ambient air to provide crew environmental control and electronic equipment cooling both in flight and on the ground. You must become familiar with some terms and definitions to understand the operating principles of air conditioning systems.

The following terms are self-explanatory*: engine heat, solar heat, electrical heat, and body heat of personnel*. These sources of heat make cabin air conditioning necessary, as does ram air temperature. Ram air temperature is the frictional temperature increase created by ram compression on the skin surface of an aircraft. This factor becomes serious only at extreme airspeeds. For example, for an aircraft flying at 45,000 feet, at 1,200 MPH, the ram air temperature would be about 2,000°F on some parts of the aircraft. This extreme temperature, plus the heat from other sources, would cause cabin temperature to rise to about 190°F. The maximum temperature that a crew member can endure and still maintain top physical and mental efficiency is about 80°F. Prolonged

exposure to a temperature greater than 80°F will seriously impair mental and physical abilities. Furthermore, under low-speed operating conditions at low temperature, cabin heating may be necessary.

> **NOTE**
>
> Some of the terms were discussed in chapter 1, “Basic Physics.” Although they are briefly defined in this chapter, a review of chapter 1 will be helpful.

Definitions for some of the terms relative to temperature control are as follows:

Absolute temperature – Temperature measured along a scale that has zero value at that point where there is no molecular motion (–273.1°C or –459.6°F).

Adiabatic – A word meaning no transfer of heat. The adiabatic process is one in which no heat transfers between the working substance and any outside source.

Ambient temperature – The temperature measured in the area immediately surrounding the object under discussion.

Ram air temperature rise – The increase in temperature created by the ram compression on the surface of an object traveling at high speed through the atmosphere. The rate of increase is proportional to the square of the speed of the object.

Temperature scales.

- Celsius (C) – a scale on which 0° represents the freezing point of water, and 100° is the boiling point of water at sea level.
- Fahrenheit (F) – a scale on which 32° represents the freezing point of water, and 212° is the boiling point of water at sea level.

Cabin System

The primary function of the cabin air conditioning and pressurization system is to maintain crew station temperature and pressure within parameters for crew safety and comfort. To do this, the system forces a mixture of dehumidified refrigerated air and hot engine bleed air through crew station louvers. The temperature of the mixture is automatically maintained through a continuously selective range by a temperature control system, consisting of temperature sensors with associated flow control valves and an electronic controller. A pressure regulator and safety valve control cabin pressure. The manual dump control is available if the safety valve malfunctions. A block diagram for the airflow of a cabin air conditioning and pressurization system is shown in *Figure 4-26*.

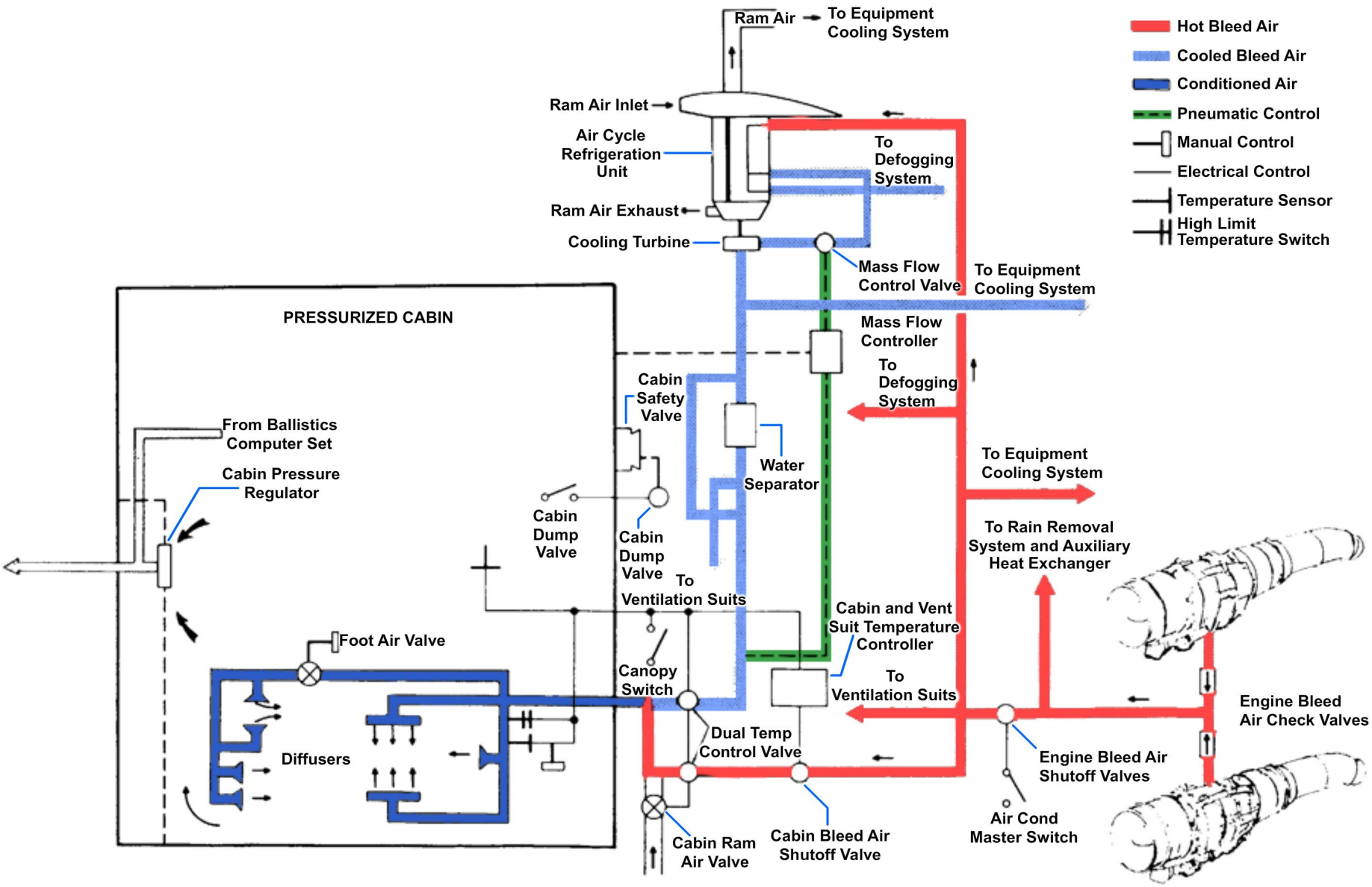

Figure 4-26 — Cabin air-conditioning and pressurization diagram.

System Controls

The Environmental Control System (ECS) control panel is shown in *Figure 4-27*. Switches and knobs on the ECS control panel assembly control the air-conditioning operation.

Figure 4-27 — Environmental Control System (ECS) control panel.

The Air Cycle Air Conditioning System (ACACS) cools and conditions engine bleed air for use in the ECS and other systems from the crew station. The air-conditioning system control consists solely of the ECS Temperature/Flow Controller. From here out, it will be referred to as the ECS Temp/Flow Controller. The ECS Temp/Flow Controller is a microprocessor-based, fully integrated digital control unit with an upload capability that allows upgrades when system changes are necessary. The ECS Temp/Flow Controller provides automatic electrical control and monitoring of many systems in the ECS group and it provides fault detection and fault isolation of system components. It uses continuous and initiated Built-In-Test (BIT) to monitor system degradation status and communicates with the aircraft's Mission Computer (MC) to produce Maintenance Status Panel (MSP) codes as required. To understand the operation, the aircraft is in flight and bleed air is being sent through the ECS system.

> **NOTE**
>
> Many ACACS components are part of the ECS Pack Assembly which is removed/installed as unit.

The ECS panel assembly in the crew station contains the switchology to operate the aircraft air-conditioning system. The MODE switch provides system mode selection data to the ECS Temp/Flow Controller. In response, the ECS Temp/Flow Controller will provide command signals to several components in the avionics cooling and defog and air cycle air-conditioning systems. The MODE switch is a three-position toggle switch with the positions AUTO, MAN, or OFF/RAM. When set to the forward AUTO position, the ECS Temp/Flow Controller directs the System Flow Modulating Pressure Regulator to satisfy the total airflow requirements of the cabin or crew station and the avionics cooling system as dictated by flight conditions and pilot input. When the MODE switch is set to the middle position, MAN, the ECS Temp/Flow Controller removes the position command to the System Flow Modulating Pressure Regulator; thus, the valve regulates maximum airflow to the crew station and provides sufficient airflow for crew comfort and

avionics cooling. When the ECS MODE switch is set to aft position, OFF/RAM, the ECS Temp/Flow Controller shuts down the Air Cycle Air Conditioning System (ACACS). The System Flow Modulating Pressure Regulator is driven fully closed. This stops all airflow to the ACS Turbine/Compressor. At the same time, the ECS-off status is reported to the MC. The Servo Air Moisture Separation mode is warm, dry air provided by the Warm Air system for use as muscle air for the Avionics Flow Control Valve and the Cabin Flow Control Valve.

The cabin TEMP control knob, located on the ECS panel, provides aircrew temperature selection data to the ECS Temp/Flow Controller. In response, the controller provides command signals to the Cabin Flow Control Valve and the Cabin Add-Heat Valve which are part of the cabin cooling and defog system and provides signals to determine the proportional amounts of engine bleed air and refrigerated air mixture from the LCS No. 3 Heat Exchanger. The cabin TEMP control knob is a rotary type knob and the selections are COLD to HOT.

Automatic (AUTO) Mode Operation

As you read this section, refer to *Figure 4-28.* With engine bleed air supplied to the aircraft and the Secondary Bleed Air Pressure Regulating Shut-off Valve opened, engine-supplied bleed air is ready to be distributed to the components of the air-conditioning system. Placing the crew station ECS MODE switch to AUTO (*Figure 4-28, frames 1, 2 and 3*), the ECS Temp/Flow Controller receives ECS MODE switch position signals. Simultaneously, the Power Distribution Panel (PDP) No. 6, 28 VDC is routed through the CBN RAM AIR VLV circuit breaker to the normally open contact of the ECS control panel. ECS processor signals—internal to the ECS Temp/Flow Controller—are sent from the controller through the ECS MODE switch closed contacts and back to the ECS Temp/Flow Controller *(Figure 4-28, frame 4)*. ECS command signals are sent to the Compressor Inlet Pressure Sensor, Condenser Icing Pressure Sensor, Condenser Delta Pressure Sensor, Compressor Protective Temperature Sensor, Condenser Outlet Temperature Sensor, and the Secondary Heat Exchanger Bypass Valve *(Figure 4-28, frames 5 through 12)*. Additionally, an ECS Temp/Flow Controller output signal is sent to the System Flow Modulating Pressure Regulator closed contacts. The ECS Temp/Flow Controller receives and processes these input signals from the ECS control panel switchology, ECS sensors, and control valves (*Figure 4-28, frames 10 and 11*).

Hot bleed air, precooled by the Primary Heat Exchanger (*Figure 4-28, frame 13*), enters the compressor end of the Turbine/Compressor Assembly mounted to the top of the ECS Pack. The Compressor Inlet Pressure sensor monitors the inlet air of the Turbine/Compressor temperature and senses if temperature reached is the set value as determined by the ECS controller. If predetermined values are too high, the ECS controller will send a signal to the MC displays as appropriate. When bleed air from the System Flow Modulating Pressure Regulator enters the Turbine/Compressor Assembly, it is compressed to approximately twice its inlet pressure.

A portion of the air leaving the compressor is directed downstream to the Compressor Protective Temperature Sensor. Temperature sensor output signals are sent back to the ECS Temp/Flow Controller for processing. Cooled compressed bleed air is also sent to the Secondary Heat Exchanger Bypass Valve and around the Secondary Heat Exchanger, Liquid Cooling System (LCS) No. 1 Heat Exchanger, and the Intermediate Water Extractor. This bypass air is sent directly to the inlet air side of the Reheater Heat Exchanger. The Secondary Heat Exchanger Bypass Valve modulates the amount of bypass air to maintain a set temperature. This also prevents icing of the condenser when the ACACS is producing more air than is required by the system. Air not

bypassed, flows through the Secondary Heat Exchanger and is cooled by ram air before passing to the LCS No. 1 Heat Exchanger. Under most flight conditions, air in the LCS No. 1 Heat Exchanger is further cooled by passing heat to the LCS fluid. This cooling allows the delivery temperature of the ECS pack to be further reduced (*Figure 4-28, frames 14, 15, and 16*). From the LCS No. 1 Heat Exchanger, air flows through the Intermediate Water Extractor. Water condensed in the Secondary Heat Exchanger and the LCS No. 1 Heat Exchanger is removed by the Intermediate Water Extractor and routed to the Secondary Heat Exchanger Water Spray Bar. Cooling in the Secondary Heat Exchangers is augmented with a water mist from the Water Spray Nozzles and Water Spray Bar.

Both Intermediate Water Extractor outlet air and bypass air enter the Reheater Heat Exchanger and the Condenser/LCS No. 3 Heat Exchanger. Here, the air is further cooled. The Reheater Heat Exchanger uses Water Extractor outlet air to absorb heat while the Condenser/LCS No. 3 Heat Exchanger uses cold turbine discharge air to absorb the heat. Water condensed in the Heat Exchangers is removed by the Water Extractor. Following water extraction, the cool dry air is warmed (reheated) in the Reheater Heat Exchanger to improve turbine operation. The dry conditioned air flows to the turbine end of the Turbine/Compressor Assembly where it is converted to mechanical energy driving the turbine and reducing the turbine discharge air to subfreezing temperatures. The turbine and the compressor are protected from overheat damage by protective temperature sensors. Electrical signals sent to the Condenser Icing Pressure sensor monitor temperature to the LCS No.3 Heat Exchanger. If too cold, signals are sent from the ECS Temp/Flow Controller to the Turbine Anti-ice Add Heat valve (*Figure 4-28, frames 17 and 18*) energizing the valve coil allowing heated airflow. Cold, dry air leaving the turbine is mixed with warm air from the Turbine Anti-ice Add Heat Valve to control temperature and prevent condenser icing. The mixed air passes through the Condenser/No. 3 LCS Heat Exchanger where it provides final temperature control of the LCS cooling fluid and airflow. After leaving the Condenser/No. 3 LCS Heat Exchanger, the air is transported to the crew station Cabin Flow Control Valve and the Avionics Flow Control Valve for avionics cooling. The Cabin Flow Control Valve directs air to the crew station and the Avionics Flow Control Valve directs cooled air to the avionics bays.

To increase heat exchanger cooling capacity during low speed flight or ground operations, Auxiliary Air Inlet doors and Bleed Air Ejectors increase ram airflow across the Primary and Secondary Heat Exchangers. Airflow to the ejectors is applied or removed through an ejector valve controlled by the ECS Temp/Flow Controller but are forced closed on the ground when the BLEED AIR switch is OFF, independent of the ECS Temp/Flow Controller.

Manual (MAN) Mode Operation

As you read this section, refer to *Figure 4-28, frames 19, and 20.* When MAN mode is selected, the ECS Temp/Flow Controller receives an ECS MODE switch position signals from the ECS control panel. In return, the ECS Temp/Flow Controller processes and removes the command signal to the Turbine Anti-ice Add Heat Valve. The valve de-energizes and warm air is completely isolated from the LCS No. 3 Heat Exchanger. Simultaneously, the ECS Temp/Flow Controller sends signals to the de-energized contacts of the ECS OFF/RAM relay, turning the System Flow Modulating Pressure Regulator motor. When the motor turns, it controls the spring-loaded valve, thus controlling the amount of air to the turbine. The ECS Temp/Flow Controller removes the position signal to the System Flow Modulating Pressure Regulator’s normally closed

contacts as the contacts are mechanically moved by the turning of the motor. ECS processor signals—internal to the ECS Temp/Flow Controller—are sent from the controller to the various sensors controlling the inputs to the controller. ECS command signals are sent to the Compressor Inlet Pressure Sensor, Condenser Icing Pressure Sensor, Condenser Delta Pressure Sensor, Compressor Protective Temperature Sensor, Condenser Outlet Temperature Sensor, and the Secondary Heat Exchanger Bypass Valve. These signals maintain the operation in the manual operation as they performed in the automatic mode. Once the ECS Temp/Flow Controller processes these sensor signals, manual operation occurs.

Hot bleed air from the Bleed Air system enters the Turbine/Compressor Assembly; the compressor sends the precooled air back downstream to the Compressor Protective Temperature Sensor where a temperature sensor output signal is sent back to the ECS Temp/Flow Controller. Cooled compressed bleed air is also sent to the Secondary Heat Exchanger Bypass Valve around the Secondary Heat Exchanger, LCS No. 1 Heat Exchanger, and the Intermediate Water Extractor. This bypass air is sent directly to the Reheater Heat Exchanger inlet. The Secondary Heat Exchanger Bypass Valve modulates the amount of bypass air to maintain a set temperature at the Reheater side of the cold air inlet. This also prevents icing of the condenser when the ACACS is producing more air than is required by the system. Air not bypassed, flows through the Secondary Heat Exchanger and is cooled by ram air before passing to the LCS No. 1 Heat Exchanger. Under most flight conditions, air in the LCS No. 1 is further cooled by passing heat to the LCS fluid. This cooling allows the delivery temperature of the ECS pack to be further reduced. From the LCS No. 1 Heat Exchanger, air flows through the Intermediate Water Extractor. Water condensed in the Secondary Heat Exchanger and the LCS No. 1 Heat Exchanger is removed by the Intermediate Water Extractor and routed to the Secondary Heat Exchanger Water Spray Bar. Cooling in both the Primary and Secondary Heat Exchangers is augmented with a water mist from the Water Spray Nozzles and Water Spray Bar.

Both Intermediate Water Extractor outlet air and bypass air enter the Reheater Heat Exchanger and the Condenser/LCS No. 3 Heat Exchanger. Here, the air is further cooled. The Reheater Heat Exchanger uses Water Extractor outlet air to absorb heat while the Condenser/LCS No. 3 Heat Exchanger uses cold turbine discharge air to absorb the heat. Water condensed in the Heat Exchangers is removed by the Water Extractor. Following water extraction, the cool dry air is warmed (reheated) in the Reheater Heat Exchanger. The dry conditioned air flows to the turbine end of the Turbine/Compressor Assembly where it is converted to mechanical energy driving the turbine and reducing the turbine discharge air to subfreezing temperatures. The turbine and the compressor are protected from overheat damage by protective temperature sensors. Electrical signals sent to the Condenser Icing Pressure Sensor monitor temperature to the LCS No.3 Heat Exchanger. Cold, dry air leaving the turbine passes through the Condenser/No. 3 LCS Heat Exchanger where it provides final temperature control of the LCS cooling fluid. After leaving the Condenser/No. 3 LCS Heat Exchanger, the air is transported to the crew station Cabin Flow Control Valve and the Avionics Flow Control Valve for avionics cooling and crew comfort.

To increase heat exchanger cooling capacity during low speed flight or ground operations, Auxiliary Air Inlet Doors and BLEED Air Ejectors increase ram airflow across the Primary and Secondary Heat Exchangers. Airflow to the ejectors is applied or removed through an ejector valve controlled by the ECS Temp/Flow Controller but are forced closed on the ground when the BLEED AIR switch is OFF, independent of the ECS Temp/Flow Controller.

OFF/RAM Mode Operation

This mode is also referred to as the Emergency mode. When OFF/RAM mode is selected (*Figure 4-28, frame 22*), the ECS Temp/Flow Controller receives ECS MODE switch position signal from the ECS Control Panel. In return, the ECS Temp/Flow Controller processes and sends signals through the ECS OFF/RAM relay's energized coil to the System Flow Modulating Pressure Regulator Motor and the regulator is driven to the full-closed position. This shuts off bleed air to the Turbine/Compressor Assembly from the Secondary Pressure Regulating Shutoff Valve. Airflow to the crew station is now provided by ram air entering the system and the airflow for the avionics bays for avionics cooling is provided by the Emergency Aft Avionics Cooling Fan and ram air provided by the Auxiliary Air Inlet Doors. Throttle position Rotary Variable Differential Transformers (RVDTs) and aircraft Mach number determines when the Auxiliary Air Doors are opened and closed. The ECS Temp/Flow Controller sends ECS OFF status signal to MC for processing. When the system is shut down, the ECS Temp/Flow Controller commands the Ejector Shutoff Valve open. The Primary and Secondary Heat Exchanger Ejectors pull extra ram air across Primary and Secondary Heat Exchangers to allow more cooling. Built-in-Test (BIT), provided by the ECS controller evaluates performance of Air Cycle Air Conditioning System components and provides any related maintenance codes to display in the Maintenance Status Panel.

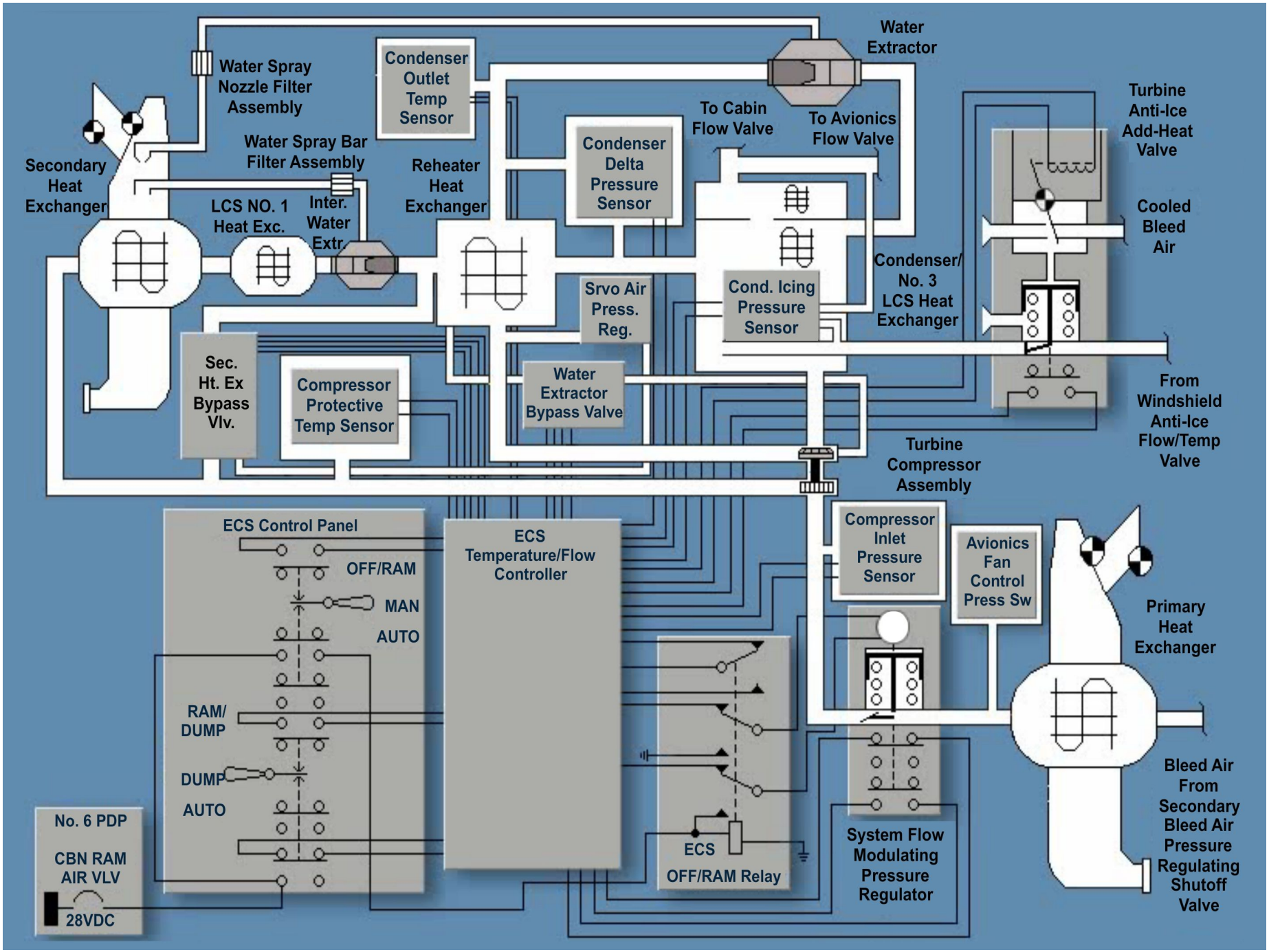

Figure 4-28 — Air Cycle Air-Conditioning System schematic diagram.

Interaction Available

Equipment Cooling System

Ram air is the primary means of ventilation for the forward and aft equipment compartments. The Ram Air Thermal Switch, Equipment Cooling Valve, Forward Compartment Ram Air Valve, and the Aft Compartment Ram Air Valve control ventilation of these compartments.

The equipment cooling system flow diagram is shown in *Figure 4-29*. When the aircraft is in flight, the equipment cooling valve closes and the forward and aft compartment ram air valves open. Under these conditions, the right forward and aft equipment compartments are ram air ventilated. When temperature in the right wing ram air duct reaches 46.1°C (115°F), the equipment cooling valve opens, and the forward and aft compartment ram air valves close. This permits moist, cooled bleed air into the right forward and aft equipment compartments, ensuring adequate cooling when ambient air temperatures are excessive.

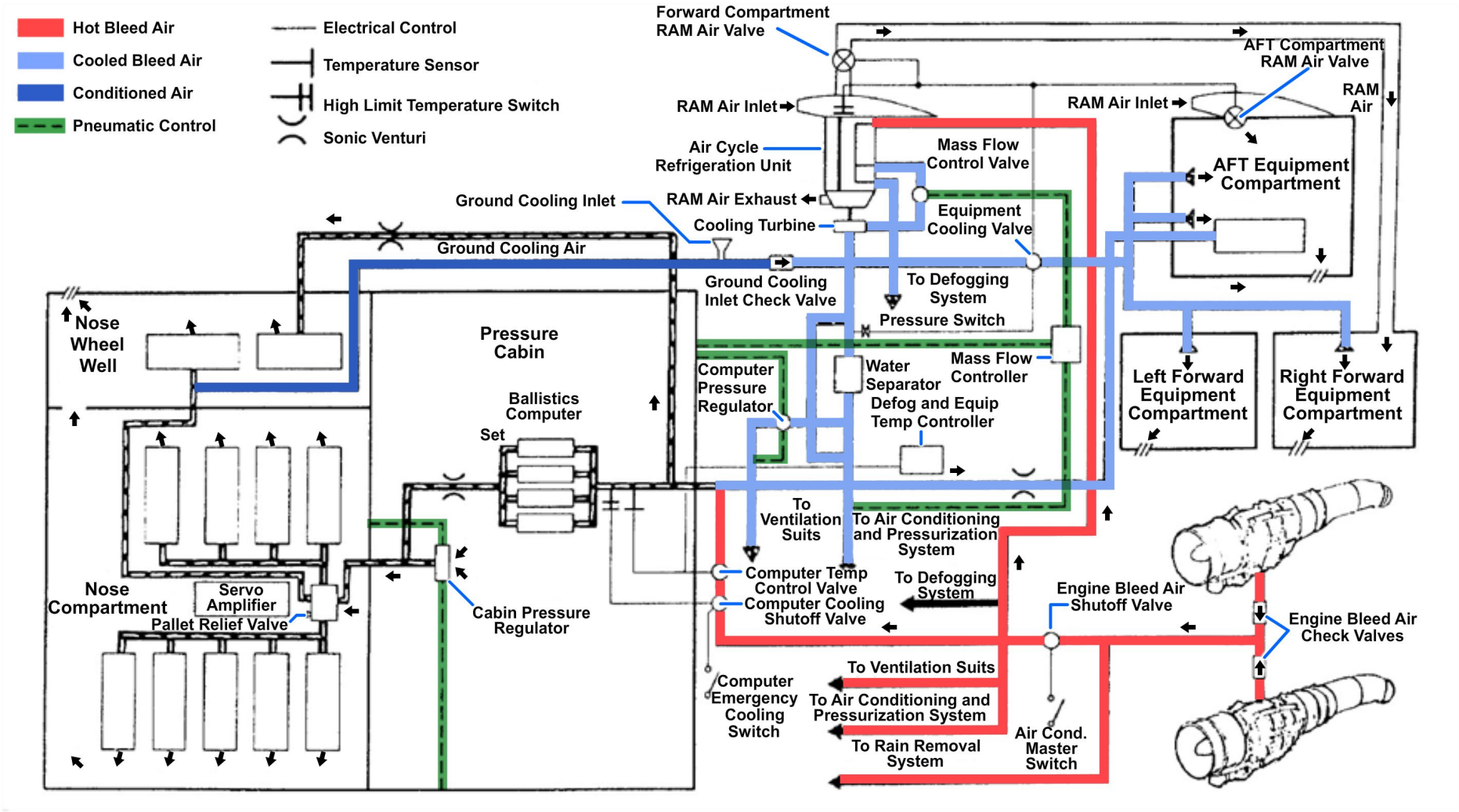

Figure 4-29 — Equipment cooling flow diagram.

With an engine running, the equipment cooling system *(Figure 4-30)* automatically engages when the AIR COND MASTER switch is at NORM. Under these conditions, the circuit from the 28-volt DC Essential Bus to the solenoid of the Engine Bleed Air Shutoff Valve is complete. Bleed air now flows to the Air Cycle Refrigeration Unit. The discharge from the cooling turbine supplies the cooled bleed air used by the Equipment Cooling System (ECS).

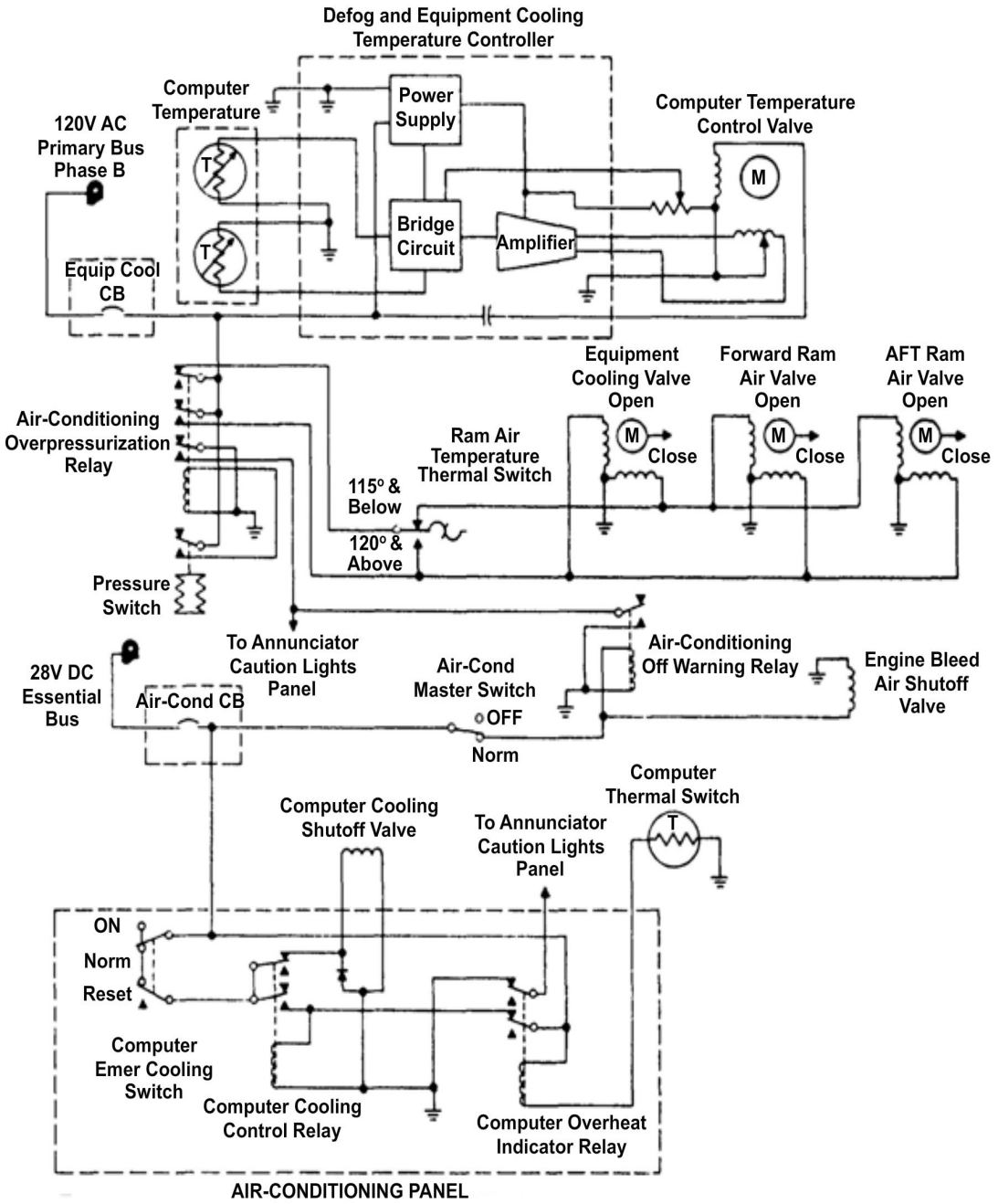

Figure 4-30 — Equipment cooling schematic diagram.

When the aircraft is airborne and the ram air temperature is below 46.1°C (115°F), voltage from the 120-volt AC Primary Bus runs through the Overpressurization Relay and the unoperated Ram Air Thermal Switch to the Equipment Cooling Valve, the Forward Compartment Ram Air Valve, and the Aft Compartment Ram Air Valve. The Equipment Cooling Valve runs to the fully closed position, and the Forward Compartment and Aft Compartment Ram Air Valves run to the open position. Ram air flows to the right forward and aft equipment compartments and the cooled bleed airflow is shut off.

When the ram air temperature exceeds 46.1°C, the Ram Air Temperature Thermal Switch operates. Voltage from the 120-volt AC Primary Bus goes through the Overpressurization Relay, and the Operated Ram Air Thermal Switch to the Equipment

Cooling Valve, the Forward Compartment Ram Air Valve, and the Aft Compartment Ram Air Valve. The Equipment Cooling Valve runs to the open position, and the Forward Compartment and Aft Compartment Ram Air Valves run to closed position. Undried, cooled bleed air flows to the forward and aft equipment compartments. The ram air to these compartments is shut off.

When an overpressurization condition occurs, the pressure switch operates. This closes the Overpressurization Relay. Voltage from the 120-volt AC Primary Bus runs through the Overpressurization Relay to the Equipment Cooling Valve, the Forward Compartment Ram Air Valve, and the Aft Compartment Ram Air Valve. The Equipment Cooling Valve goes to the open position and the Forward and Aft Compartment Ram Air Valves run to the closed position. Under these conditions, the overpressure dumps into the forward and aft equipment compartments.

The Computer Pressure Regulator maintains a pressure of 2 to 3 PSI in the equipment cooling line. The pressure-regulated, partially-dried cooled bleed air from the regulator automatically mixes with controlled quantities of hot bleed air. The servo-controlled Computer Temperature Control Valve controls the mixture process. This valve modulates in response to temperature signals from the computer temperature sensor in the computer inlet duct to maintain a computer duct temperature of 4.4° ± 2.8°C (40° ± 5°F). The temperature controlled air flows through the Ballistics Computer Set. Sonic venturis in the Ballistics Computer Outlet Duct and the Transmitter Modulator Inlet Duct limit the flow of cooling air.

A Computer Cooling Shutoff Valve upstream of the Computer Temperature Control Valve provides a safety override for the Computer Temperature Control Valve. If the computer duct temperature exceeds 65.6°C (150°F), the computer thermal switch opens. This de-energizes the computer overheat indicator relay and completes the circuit to the COMPUTER OVERHEAT caution light. Voltage from the 28-volt essential DC bus runs to the Computer Overheat Indicator Relay. This energizes the Computer Cooling Control Relay, thereby closing the Computer Cooling Shutoff Valve. If the computer duct temperature drops below 65.6°C, the contacts of the Computer Thermal Switch close, energizing the Computer Overheat Indicator Relay. This action interrupts the circuit to the COMPUTER OVERHEAT caution light. The Computer Cooling Control Relay remains energized through the Computer Emergency Cooling Switch and its own contacts. Placing the CMPTR EMER COOL switch momentarily to RESET de-energizes the Computer Cooling Control Relay, completing the circuit to open the Computer Cooling Shutoff Valve. If the COMPUTER OVERHEAT caution light should cycle on and off indicating a constant overheat condition, place the CMPTR EMER COOL switch to ON, permanently closing the Computer Cooling Shutoff Valve. This allows uncontrolled, cooled bleed air to duct to the Ballistics Computer.

Air exhausted from the Ballistics Computer Set and from the crew station circulates through the less critical electronic equipment compartments. This air supplies direct cooling requirements for Communication, Navigation, and Identification (CNI) equipment in the aft equipment compartment.

Cabin and Vent Suit Temperature Control System

The Cabin and Vent Suit Temperature Controller is a transistorized electronic device. It operates on 120 volts, 400 hertz. Maximum power consumption is 28 watts.

Electrically, the controller consists of two channels—the cabin temperature channel and the ventilated suit channel. Both channels operate in basically the same manner. Bridge circuits compare temperature selector and temperature sensor resistances, which

represent selected and actual temperature conditions and generate a resultant DC error voltage. The DC error voltage is then modulated and amplified. The resulting AC signal is the controller output, and it has phase and voltage characteristics proportional to the magnitude of the DC error signal. It goes to the two-phase servomotor of the appropriate control valve, where it modulates the valve to maintain the selected temperature.

The Cabin Temperature Channel *(Figure 4-31)* of the temperature controller uses three bridge circuits to maintain cabin temperature. Selection of the desired temperature with the Cabin Temperature Selector varies resistance of one leg of the cabin temperature bridge. The varying cabin temperature changes the resistance of the cabin sensor in the second leg of the bridge circuit. Thus, a selected temperature must have a change of cabin temperature to provide bridge balance between the cabin sensor and selector. Whenever bridge imbalance exists, the resulting DC voltage is AC modulated by the modulator circuit, amplified by the Cabin Amplifier, and fed to the Control Valve Servomotor to either increase or decrease cabin temperature.

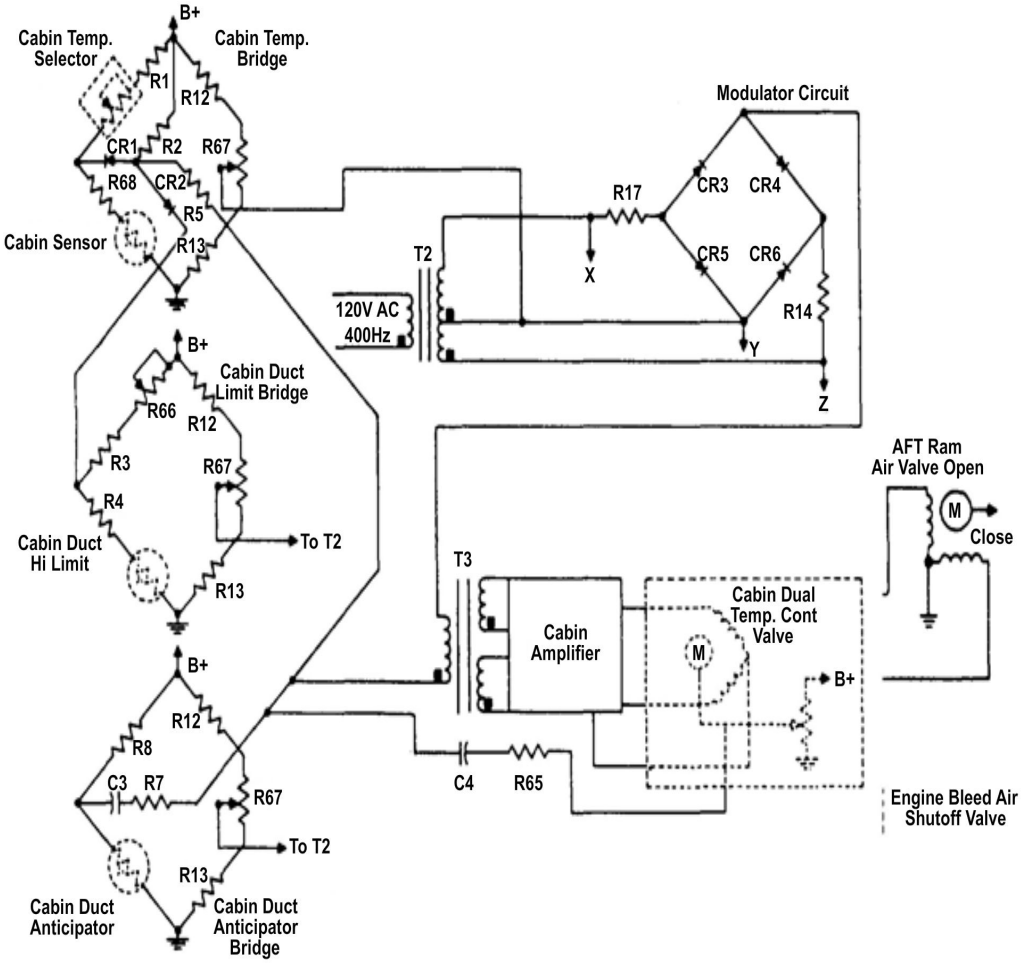

Figure 4-31 — Cabin temperature channel.

The function of the Cabin Duct Limit Bridge is to limit the temperature of the cabin inlet air. A diode-biasing network permits the Cabin Duct Limit Bridge to override the Cabin Temperature Bridge upon reaching the duct temperature limit. The resulting DC voltage

goes to the Modulator Circuit, the Cabin Amplifier, and to the Control Valve Servomotor to decrease cabin temperature.

The Cabin Duct Anticipator Bridge functions with sudden changes of air temperature in the cabin air inlet duct. To do this, the error voltage is capacitor coupled to the modulator. When the cabin temperature is being held at the selected temperature with constant cabin inlet air temperatures, the Anticipator Bridge is in balance. Should duct temperature suddenly change, with all other conditions remaining the same, the Anticipator Bridge is unbalanced. This unbalance causes an error voltage to go to the modulator circuit. The resulting amplified signal regulates the Cabin Control Valve to return the duct air to its original temperature. Error voltages caused by Cabin Temperature Bridge or Cabin Duct Limit Bridge imbalance override the Cabin Duct Anticipator Bridge, provided the duct air temperature error is gradual or small.

One additional error voltage is capacitor coupled to the modulator circuit. The voltage change is proportional to the rate of change of the feedback potentiometer of the Cabin Dual Temperature Control Valve. This voltage change is applicable only when the valve is being regulated (the feedback potentiometer is rotating). Therefore, the error feedback voltage seen at the control input is proportional to the feedback potentiometer rate of change. Once regulation of the valve starts, the potentiometer rate-of-change voltage reduces initial starting voltage to the control valve actuator motor, slowing valve actuator rotation.

The Vent Suit Channel *(Figure 4-32)* of the Temperature Controller uses one bridge circuit to maintain suit temperature. Operation of this bridge is similar to that of the Cabin Temperature Bridge. The Suit Temperature Selector resistance in one leg balances against the suit duct temperature sensor resistance in the opposite leg. Imbalance between the legs of the Suit Temperature Bridge results in a DC error voltage. This voltage is AC modulated by the modulator circuit, amplified, and goes to the Suit Temperature Control Valve, altering suit air temperatures.

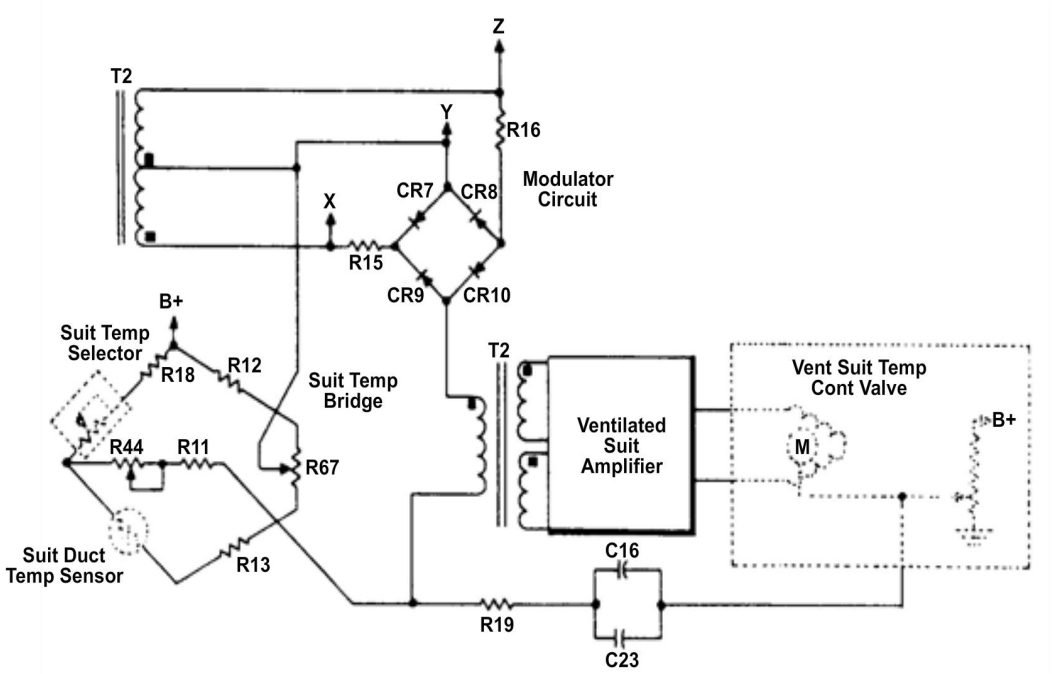

Figure 4-32 — Vent suit channel.

Rate-of-change voltage from the feedback potentiometer in the ventilated suit temperature control valve is capacitance-coupled to the modulator circuit. As in the cabin temperature channel, this voltage is present only when the valve is operating. It reduces the initial starting voltage to the valve once actuator rotation has started, thus slowing actuator rotation.

Anti-Icing and Deicing Equipment

The anti-ice and defrost system on some aircraft having the air-conditioning and pressurization system described in this chapter use the air cycle systems as an air source. The anti-ice and defrost equipment consists of the Windshield Anti-ice System *(Figure 4-33)* and the Windshield Defrost System. Each receives its hot air supply from the same manifold. The Anti-icing Switch is on the pilot's Temperature Control Panel.

In a typical system, a windshield overheat thermostat and a shutoff valve in the windshield defrosting duct operate together to prevent windshield overheating. The thermostat opens the valve automatically when the temperature becomes too high. This action diverts the hot defrosting air to the air-conditioning outlet at the floor of the crew station until the temperature drops. Windshield overheating occurs only if the cabin air temperature high limit pickup fails.

Windshield Anti-Icing and Defogging System

An electrical anti-icing and defogging system is now in the windshield panels of current naval aircraft. The panels are constructed of two pieces of semi-tempered plate glass laminated with a vinyl plastic core. The core acts as a safety device to prevent shattering in a collision with birds when it is in the heated condition. The resistance heating element for anti-icing and defogging consists of a transparent, electrically conductive film, evenly distributed over the inner surface of the outer pane of glass. The system includes the following additional components:

- A windshield wire terminal box, located between the windshield panels
- A temperature-sensing element embedded in each panel
- Two windshield autotransformers and a heat control relay
- A dual windshield control unit
- A windshield heat control toggle switch located in the crew station

The system receives power from the AC buses through the windshield heat control circuit breakers. When the Windshield Heat Control Switch is in HIGH, 115 volts, 400 hertz goes to the left and right amplifiers in the Dual Windshield Control Unit. The Windshield Heat Control Relay then energizes, applying two phases of AC power at 200 volts, 400 hertz to the Windshield Heat Autotransformers. These transformers provide 218-volt AC power to the Windshield Heating Current Bus Bars through the Dual Windshield Control Unit Relays. The sensing element in each windshield has a POSITIVE temperature coefficient of resistance and forms one leg of a bridge circuit. (Some systems use a thermistor, which has a negative temperature coefficient, as a sensing element to control windshield temperature.)

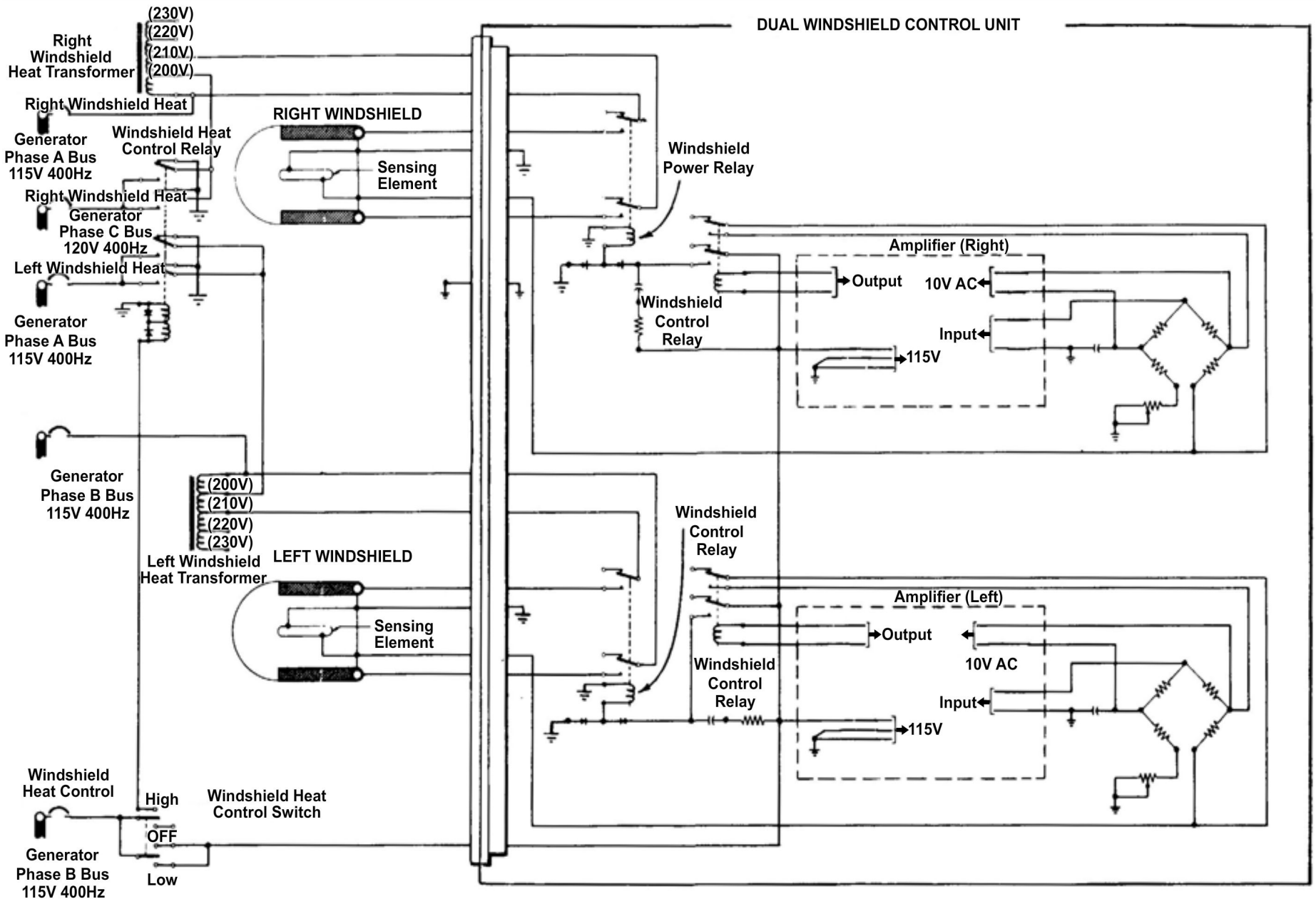

Figure 4-33 Windshield anti-icing system.

When windshield temperature is above calibrated value, the sensing element has a higher resistance value than needed to balance the bridge. This decreases the flow of current through the amplifiers, and the relays of the control unit are de-energized. As the temperature of the windshield drops, the resistance value of the sensing element also drops. Now, the current through the amplifiers again reaches sufficient magnitude to operate the relays in the control unit, thus energizing the windshield heaters.

When the windshield heat control switch is in LOW, autotransformers provide 115 volts, 400 hertz ac to the left and right amplifiers in the dual windshield control unit. In this condition, the transformers provide 121-volt ac power to windshield heating current bus bars through dual windshield power relays. The sensing elements in the windshield operate in the same manner as described for high heat operation. The calibrated units maintain windshield temperature between 40°C and 49°C (105°F to 120°F).

Wing and Tail Anti-Icing

Some aircraft have a Thermal Anti-icing System that prevents formation of ice on the leading edge of the wing panels and tail surfaces. This system uses hot air to heat the leading edges. The hot air comes from a combustion heater in the wings and tail section, or from the compressor section of a jet engine. An electrically operated pump supplies fuel for the anti-ice heaters. Heater demand determines the amount of fuel the pump delivers. In some aircraft, thermostats automatically determine heater demands. Various types and combinations of solenoid-operated valves control fuel flow and airflow in the system.

Wing and Tail Deicing

Some aircraft may have air-inflated, rubber deicer boots on the leading edges of wing and tail surfaces. Air pressure or vacuum is alternately applied to these boots and cracks off any ice that has formed. Once the ice has cracked, the force of the airstream peels it back and carries it away. Pressure for inflating the air cells in the deicer boots is normally from engine-driven pumps. Air pressure or vacuum is alternately applied either by the use of motor-driven rotary distribution valves or by the combination of an electronic timer and solenoid distributor valves.

Empennage Deicing

The P-3 empennage deicing system combines both anti-icing and deicing for the vertical and horizontal stabilizers. The system uses electrical power to prevent or remove the accumulation of ice. Electrical heating elements are in the leading edges and surfaces of the empennage. The system has ac power and dc control. Parting strips in the leading edge of each stabilizer accomplish anti-icing requirements. The parting strips remain on once the system actuates. Twenty cyclic heat areas accomplish deicing requirements. During normal operation, each of the cyclic areas heat for 8 seconds and are off for 168 seconds. Overheat sensors and a thermal-sensitive relay protects the system. Any time the system detects an over heat, power is shut off automatically to prevent damage to the metal structure.

Pitot Tube Anti-Icing

To prevent the formation of ice over the opening in the pitot tube, a built-in electric heating element *(Figure 4-34)* is used. A switch on the pilot's console controls power to the heaters. System power is from either the ac or the dc bus. Exercise caution when ground checking the pitot tube since the heater cannot operate for long periods unless

the aircraft is in flight. Also, the danger exists for ground personnel to be accidentally burned.

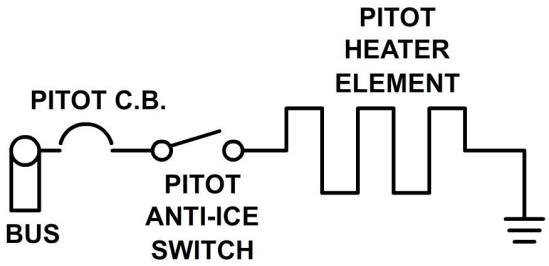

Figure 4-34 — Pitot tube anti-icing circuit.

End of Chapter 4

AIRCRAFT ELECTRICAL SYSTEMS

Review Questions

4-1. What are the two primary purposes of aircraft lighting?

A. Provide illumination for night navigation and identification
B. Provide specialized exterior lighting and illuminating the interior
C. For manual lighting
D. To indicate normal operation and control of electrical systems

4-2. Why should spare light bulbs be shock mounted?

A. To prevent filament fatigue failure.
B. To keep bulbs clean
C. To make sure bulbs lock in the socket
D. To prevent bulbs from contacting wires

4-3. What type of light is used to attract visual attention to the aircraft's position and heading at night?

A. Reflector
B. Anti-collision
C. Globular
D. Navigation

4-4. What type of aircraft is identified by a bluish-green anti-collision light?

A. Search and Rescue
B. Tanker
C. Reconnaissance
D. Emergency

4-5. When the angle of attack is perfect for the landing approach, what color AOA light illuminates?

A. Green
B. Red
C. Amber
D. Flashing green

4-6. As an AE your primary concern with hydraulics will be to _____.

A. convert fluid pressure to work
B. schedule precise amount of fluid flow
C. increase reliability
D. control the flow of the fluid

4-7. In a hydraulic system, what unit creates fluid flow?

A. Check valves
B. Pump
C. Actuating cylinder
D. Selector valve

4-8. What does the hydraulic actuating unit convert fluid pressure into?

A. Thermal expansion
B. Bleeding air
C. Useful work by linear/reciprocating mechanical motion
D. Electrical energy

4-9. Why does the arresting gear hook relay have a 1.1 second delay?

A. To ensure the hook is up and locked before removing hydraulic pressure
B. To move the up latch mechanism forward to receive the hook latch
C. To ensure current is sent through hook relay
D. To break the circuit to selector relay

4-10. During emergency retraction, what is used to close the speed brake?

A. Speed brake relay
B. Airstream pressure
C. Selector valve
D. Solenoids

4-11. The frictional temperature increase created by ram compression on the skin surface of the aircraft is known as _____.

A. extreme airspeed
B. adiabatic temperature
C. ram air temperature
D. low-speed temperature

4-12. What is the primary purpose of an air-conditioning and pressurization system?

A. Crew safety and comfort
B. Equipment reliability
C. System control and operation
D. Electrical systems optimal operation

4-13. The minimum requirements for navigation lights on all military heavier-than-air aircraft are established by what agency?

A. Department of Defense
B. Department of Transportation
C. Federal Transportation Administration
D. Federal Aviation Administration

4-14. Flight safety is the primary purpose of which of the following lights?

A. Position
B. Formation
C. Fuselage
D. Anti-collision

4-15. What lights provide the pilot with angle-of-attack information?

A. Approach lights
B. Indexer lights
C. Instrument lights
D. Position lights

4-16. With reference to the indexer lights, an inverted V indicates to the pilot that the angle of attack is in which of the following positions?

A. Slightly low
B. Slightly high
C. Very high
D. Very low

4-17. What is the function of the arresting gear override switch?

A. It activates a light showing the LSO that the arresting hook is extended for landing
B. It allows the approach lights to signal that the aircraft is unprepared to land
C. It allows the approach lights to function properly while the arresting hook is up
D. It shows the pilot the position of the arresting hook

4-18. What is the purpose of the in-flight refueling probe light?

A. To illuminate the drogue of the refueling aircraft only
B. To illuminate the probe of the aircraft being refueled only
C. To illuminate the probe of the receiver aircraft and the drogue of the refueling aircraft
D. To indicate fuel flow and stoppage of fuel flow into the aircraft being refueled

4-19. When a controllable light is mounted in the nose of a helicopter, it has what total number of degrees of azimuth travel?

A. 90°
B. 180°
C. 270°
D. 360°

4-20. When replacing aircraft interior lamps or light covers, you should make sure that replacements meet the same specifications as the originally installed units for which of the following reasons?

A. Lighting fixture will require aircraft wiring alterations
B. Aircraft's power circuitry will be overloaded
C. Original specifications were based on scientific considerations of necessity and crew comfort
D. Equipment replacement supply inventory will increase

4-21. What are the advantages of the grain-of-wheat instrument lamps over other types of lamps used in instrument systems?

A. Longer life only
B. More rugged only
C. Better illumination only
D. Longer life, more rugged, and better illumination

4-22. Which of the following statements describes the push-to-test feature on warning lights?

A. It provides a means for checking the condition of the warning light bulb only
B. It provides a means for checking the system's circuits only
C. It provides a means for checking the system's circuits and the condition of the warning light bulb
D. It provides a means for momentarily activating all equipment and circuits in the respective systems

4-23. All hydraulic systems contain a minimum of which of the following basic components?

A. Pump, selector valve, actuator, and reservoir
B. Pump, pressure regulator, switch, and reservoir
C. Selector valve, filter, pump, and actuator
D. Selector valve, actuator, pressure lines, and return lines

4-24. The Wing Flap system includes two Wing Flap Asymmetry Detectors that are located on _____.

A. each wing flap
B. each wing rear beam
C. the main wing fold
D. leading wing tip

4-25. What provides electrical signals to the Position Indicator of the Wing Flap Position Indicator System?

A. Rudder Boost Shutoff Gearbox
B. Position transmitter
C. Synchro transmitter
D. Flap Drive Control

4-26. Which of the following functions is common to both the left and right main gear torque-link switches?

A. Preventing the throttles from being placed in the reverse propeller range while airborne
B. Furnishing power for the landing gear control lever locking solenoid
C. Disabling wing station external stores circuits
D. Energizing the bomb bay door control circuit

4-27. The flashing WHEELS indicators are controlled by the downlock switches and _____ lever switches.

A. engine power
B. engine control
C. gear downlock
D. wheels warning indicator

4-28. Retraction of the arresting hook is electrically controlled and hydraulically actuated; however, extension of the hook is accomplished by the use of what kind of power?

A. Hydraulic only
B. Electrical only
C. Electrical and hydraulic
D. Mechanical

4-29. What is the purpose of the time delay relay in the relay panel?

A. To dampen hydraulic pressure surges when the system is first engaged
B. To ensure that the arresting hook is fully up and locked before hydraulic pressure is removed
C. To prevent the arresting hook from dropping if the handle is inadvertently moved to the down position
D. To ensure that the arresting hook is completely down before hydraulic pressure is applied

4-30. The launch bar control switch is placed to retract, and the warning light remains on. What component failure is indicated?

A. Valve position switch
B. Weight on gear switch
C. Selector valve
D. Control switch

4-31. Which of the following is a description of the action of a speed brake control switch?

A. Speed brake extension will stop when the switch is released from the OUT position
B. Speed brake retraction will stop when the switch is momentarily held in the IN position
C. The speed brake moves fully to the indicated position when the switch is momentarily held in either the IN or OUT position
D. The degree of extension or retraction is controlled by the degree of movement of the switch lever to or from the STOP position

4-32. All of the following conditions create a demand for cabin air conditioning in aircraft flying at extreme airspeeds. Which one is the principal cause of cabin temperatures rising above the level at which the crew can maintain top physical and mental efficiency?

A. Engine heat
B. Solar heat
C. Body temperature
D. Ram air friction

4-33. Temperature that is measured from a point at which there is no molecular motion is known as the _____ temperature.

A. standard
B. absolute
C. critical
D. ambient

4-34. The Air cycle air-conditioning system maintains the crew station air temperature at a comfortable and safe level by forcing which of the following kinds of air through crew station ECS Louvers?

A. Hot engine bleed air and ambient refrigerated air
B. Hot engine bleed air and dry refrigerated air
C. Refrigerated air and cabin pressure air
D. Ambient refrigerated air and humidified hot engine bleed air

4-35. With the crew station ECS MODE switch in the AUTO position, the desired crew station temperature is maintained by which of the following means?

A. Variation in the opening of the cabin flow valve
B. Proportional amounts of engine bleed air and refrigerated air being mixed by the condenser LCS no. 1 heat exchanger
C. Proportional amounts of ram air and hot engine bleed air being mixed by the avionics flow valve
D. Proportional amounts of ram air and refrigerated air being mixed by the secondary heat exchanger bypass valve

4-36. When the crew station MODE switch is in the OFF/RAM position, what are the conditions of the system flow modulating pressure regulator valve and the secondary bleed air pressure regulating shutoff valve?

A. The system flow modulating pressure regulator valve is closed and the secondary bleed air pressure regulating shutoff valve is open
B. The system flow modulating pressure regulator valve is open and the secondary bleed air pressure regulating shutoff valve is closed
C. Both system flow modulating pressure regulator valve and the secondary bleed air pressure regulating shutoff valve are closed
D. Both system flow modulating pressure regulator valve and the secondary bleed air pressure regulating shutoff valve are open

4-37. Cabin temperature changes are anticipated by what component(s)?

A. Cabin temperature sensor only
B. Cabin temperature and duct sensors
C. Cabin duct dual temperature sensor
D. Temperature control wheel

4-38. What is the function of the cabin duct limit bridge?

A. To limit the temperature of the cabin inlet air
B. To anticipate sudden cabin temperature changes
C. To select the desired cabin temperature
D. To override the cabin duct anticipator bridge

4-39. What is the purpose of the voltage from the feedback potentiometer in the cabin dual temperature control valve?

A. To reduce the starting voltage once the valve actuator motor has started rotating
B. To ensure the error feedback signal to the modulator circuit is the correct phase
C. To prevent oscillations of the valve actuator motor
D. To cause the valve actuator motor speed to increase, giving more positive control to the temperature regulation

4-40. What is the location of the heating element for windshield anti-icing and defogging?

A. On the outer surfaces of both glasses
B. On the outer surface of the outer glass
C. Between the inner surface of the outer glass and the vinyl plastic core
D. Between the inner glass and the vinyl plastic core

4-41. What do aircraft equipped with wing deice systems use to prevent ice buildup on the leading edge?

A. Air pressure or vacuum alternately applied
B. Hot air from combustion heaters or engine compressors
C. Airstream air pressure
D. Ram air temperature

4-42. What does the P-3 empennage anti/deicing system use to prevent ice buildup?

A. Airstream air pressure
B. Ram air temperature
C. Vacuum and air pressure
D. Electrical heating elements

4-43. What method is used to deice the empennage of P-3 aircraft?

A. A powered, controlled system provides constant heat to the empennage
B. Hot engine bleed air is circulated under the surfaces
C. The leading edges and surfaces of the empennage are electrically heated
D. Heat from the cabin routed through control valves heats the empennage

RATE TRAINING MANUAL – USER UPDATE

CNATT makes every effort to keep their manuals up-to-date and free of technical errors. We appreciate your help in this process. If you have an idea for improving this manual, or if you find an error, a typographical mistake, or an inaccuracy in CNATT manuals, please write or email us, using this form or a photocopy. Be sure to include the exact chapter number, topic, detailed description, and correction, if applicable. Your input will be brought to the attention of the Technical Review Committee. Thank you for your assistance.

Write: CNATT AV Rate Training Manager
230 Chevalier Field Avenue
Pensacola, FL 32508
COMM: (850) 452-9700 utilize voice directory for AE/AT Rate Training Manager.
DSN: 922-9700 utilize voice directory for AE/AT Rate Training Manager.

E-mail: Refer to NKO AE rate training web page for curent contact information.

Rate____ Course Name_____

Revision Date_____ Chapter Number____ Page Number(s)_____

Description
_____
_____
_____

(Optional) Correction
_____
_____
_____

(Optional) Your Name and Address
_____
_____
_____