This manual contains active content, you must "trust" this document or select "play" to view the active content.
If you can read this warning, you may not have yet activated this document.

# CHAPTER 7

# COMPASS AND INERTIAL NAVIGATION SYSTEMS

The material in this chapter is about aircraft navigation systems. The basic systems discussed are the aircraft compass system and Inertial Navigation System (INS). Also, this chapter presents a discussion of the calibration of these two systems.

The way electrical signals are detected, amplified, and delivered to various indicators and systems is highly sophisticated. Before you begin this chapter, you might need to read Navy Electricity and Electronics Training Series (NEETS), Module 15, *Principles of Synchros, Servos, and Gyros,* NAVEDTRA 14187.

## LEARNING OBJECTIVES

When you have completed this chapter, you will be able to do the following:

1. State the navigation-related terms and definitions basic to compass and inertial navigation system operation.
2. Explain the operating principles and features of compass systems, the attitude reference system, and associated sensors and indicators.
3. Summarize the operating principles and characteristics of the inertial navigation system, to include Schuler loops and tuning; and identify navigation errors and aligning and calibration procedures.
4. Describe the two types of Inertial Navigation Systems and discriminate between systems within those two types.

## NAVIGATION TERMS AND DEFINITIONS

Any purposeful movement in the universe involves an intention to proceed to a definite point. Navigation is the business of proceeding so you will arrive at that point. Air navigation is defined as the process of directing the movement of an aircraft from one point to another. The function of air navigation is to locate positions and measure distance and time along the intended direction of flight.

### Position

Position is a point defined by stated or implied coordinates. You will frequently qualify this term by such adjectives as estimated, dead reckoning, no wind, etc. However qualified, the word position always refers to some place that you can identify. One of the basic problems of the navigator is that of fixing his position. If he does not know where he is, he can’t direct the movement of the aircraft to its intended destination.

### Direction

Direction is the position of one point in space relative to another, without reference to the distance between them. Direction may be either three-dimensional or two-dimensional, the horizontal being the usual plane of the latter. For example, the direction of San Francisco from New York is approximately west (two-dimensional). However, the direction of an aircraft from an observer on the ground may be west and 20° above the horizontal (three-dimensional). Direction (for example, east) is not itself

an angle, but it is often measured in terms of its angular distance from a reference direction.

### Course

Course is the intended horizontal direction of travel. For example, the direction of NAS Jacksonville from NAS Pensacola is east. This should be the intended direction of flight. However, because of wind conditions aloft, the aircraft might not head straight toward Jacksonville, but somewhat to one side. No matter what the aircraft heading is, the course, the intended direction, is still east.

### Heading

Heading is the horizontal direction in which an aircraft is pointing. In the previous example, you can see the difference between course and heading. Heading is the actual orientation of the aircraft's longitudinal axis at any instant, while course is the direction of travel intended. True heading uses the direction of the geographic North Pole as the reference. Magnetic heading uses the direction of the earth's magnetic field at that location as the reference. Magnetic heading differs from true heading by the amount of Magnetic Variation (MAGVAR) at that location. Compass heading differs from magnetic heading by the amount of magnetic deviation. Compass heading differs from true heading by the amount of compass error (deviation ± variation).

### Bearing

Bearing is the horizontal direction of one terrestrial point from another. Bearings can be expressed by reference to two terms—true north or the direction in which the aircraft is pointing. If true north is the reference direction, the bearing is a true bearing. If the reference direction is the heading of the aircraft, the bearing is a relative bearing. If you get a bearing by radio, it is a radio bearing; if visual, it is a visual bearing. Thus, the direction between two objects on (or near) the surface of the earth can be described concisely by saying: THE (RADIO, VISUAL) BEARING OF A FROM B IS X ± (RELATIVE, TRUE).

### Distance

Distance is the separation between two points. To measure distance, you measure the length of a line joining the two points. This seems understandable enough. However, suppose that the two points are on opposite sides of a baseball. How do you draw the line? Does it run through the center of the ball, or around the surface? If around the surface, what path does the line follow? You must qualify the term distance used in navigation to show how to measure the distance. The shortest distance on the earth's surface from San Diego to Sydney, Australia, is 6,530 miles. However, via Honolulu and Guam, a frequently used route, it is 8,602 miles. You can express the length of a chosen line in various units, such as miles, kilometers, or yards.

### Time

Time has many definitions. The two definitions used with navigation are as follows: (1) the hour of the day and (2) an elapsed interval. The first appoints a definite instant, as when takeoff time is 0214. The second definition appoints an interval, such as time of flight of 2 hours 15 minutes.

## Poles

The earth's geographic poles are the extremities of the earth's axis of rotation. Look at *Figure 7-1*. Here, Pole north ($P_n$), East (E), Pole south ($P_s$) and West (W) represent the surface of the earth at sea level. Line $P_nP_s$ is the axis of rotation. The earth's rotation is such that all points in the hemisphere, $P_nWP_s$, approach the viewer. Those points in the opposite hemisphere will recede from the viewer. The extremities of the axis, points $P_n$ and $P_s$ are the north and south poles, respectively. A man on the surface of the earth, facing in the direction of rotation, has the North Pole on his left. East will be in front of him, the South Pole on his right, and west behind him.

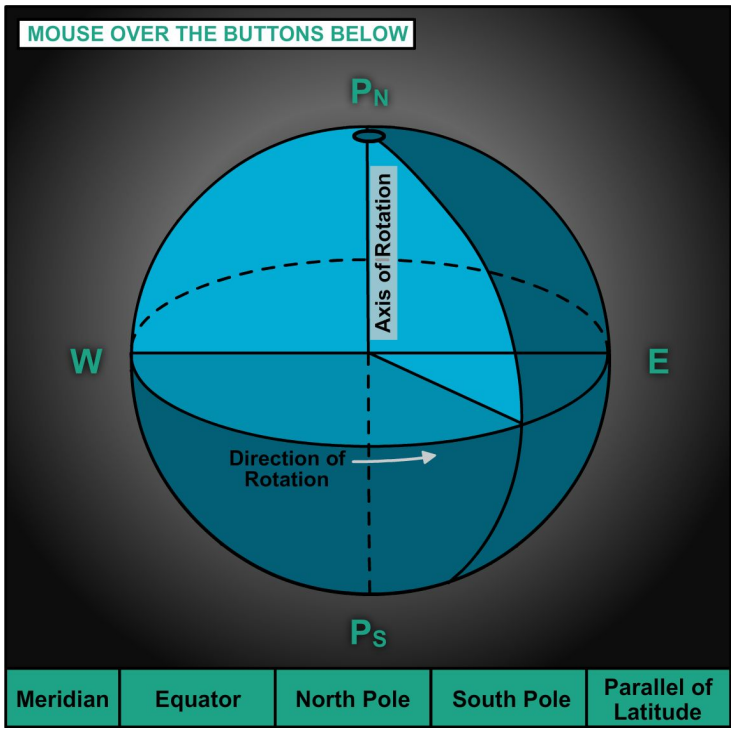


**Figure 7-1 — Schematic representation of Earth showing axis of rotation and equator.**

Interaction Available

The earth has some of the properties of a bar magnet. The magnetic poles are the regions near the ends of the magnet. This is where the highest concentration of magnetic lines of force exists. However, the earth's magnetic poles are not at the geographic poles, nor are they antipodal (opposite) to each other.

## Great Circles and Small Circles

The intersection of a sphere and a plane is a circle. The intersection is a great circle if the plane passes through the center of the sphere. It will be a small circle if it does not.

## Parallels and Meridians

Look at *Figure 7-2*. Here, the earth's equator is a great circle.

**Figure 7-2 — The equator is a great circle whose plane is perpendicular to the polar axis.**

If a second plane *(Figure 7-3)* passes through the earth parallel to the equator, its intersection is a small circle. Small circles don't always have planes perpendicular to the polar axis. However, if they are perpendicular, then all points on the small circle are equidistant from the equator; that is, the circles are parallel to the equator. Such small circles, together with the equator, are PARALLELS. They provide one component of a system of geographical coordinates.

**Figure 7-3 — The plane of a parallel is parallel to the equator.**

Now, suppose that planes pass through the earth's poles *(Figure 7-4).* Such planes contain the axis, and since they also contain the center, they form great circles at the surface. Great circles through the poles of the earth are MERIDIANS. All meridians are perpendicular to the equator. Meridians form the second part of a system of geographical coordinates commonly used by navigators.

**Figure 7-4 — Great circle through the poles form meridians.**

## Latitude and Longitude

You can identify any point on Earth by the intersection of a parallel and a meridian. It is the same as locating an address at the corner of Fourteenth Street and Seventh Avenue. You are just using different names for identifying the parallels and meridians.

The circumference of a circle is divided into 360 units. This unit is the degree. It is the same unit you use to measure an angle. In *Figure 7-5*, circumference equator (Q)$P_n$Q$P_s$ represents a meridian. QQ´ represents the equator, whose plane passes through the axis of rotation. Let M be some position north of the equator on a meridian. The number of degrees in arc QM is the measure of angle QOM. If arc QM is 30°, then angle QOM is 30°. Thus, you measure a central angle by measuring its subtended arc.

Let MM´ be the plane of a small circle parallel to QQ´, the equator. Then arc QM measures the distance of any point on MM´ from the equator. You can describe the whole parallel MM´ by saying that it is 30° north of the equator. Similarly, you can say any point on NN´ is 45° south of the equator. The angular distance of a position north or south of the equator is the position's latitude. You measure latitude northward or southward through 90° and label it N or S to show the direction of measurement. You express latitude in terms of the angle at the center; see angle QOM in *Figure 7-5*. Latitude, then, is the north-south geographical coordinate. The east-west geographical coordinate is longitude. You can define longitude in three ways:

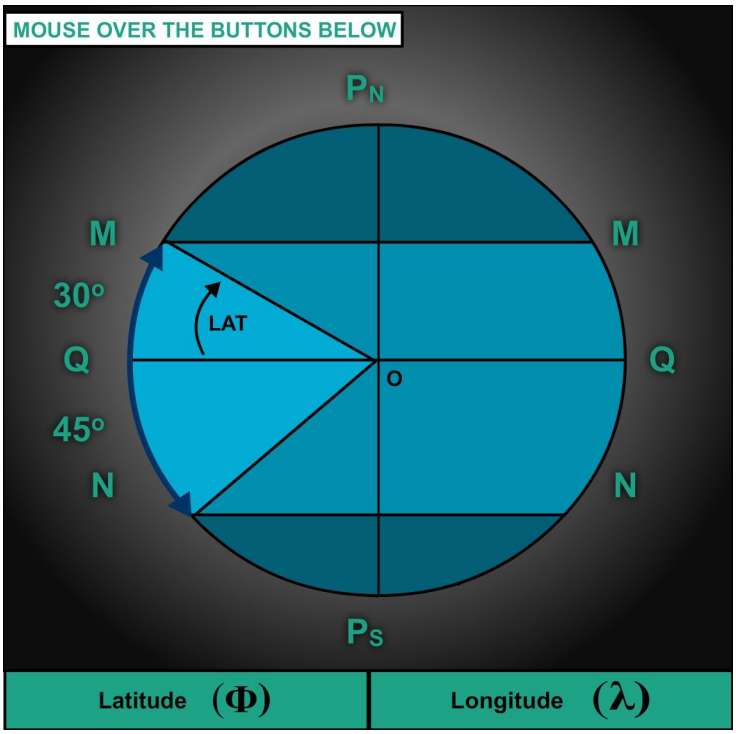


**Figure 7-5 — Latitude of M is angle QOM or arc QM.**

1. As an arc of the equator or a parallel.
2. As the angle at the pole or the angle at the center between the planes of the prime meridian.
3. As the meridian of a point on Earth. You measure this point eastward or westward from the prime meridian through 180°. Label it E or W to show the direction of measurement.

You measure latitude from a standard great circle (the equator). You also use a standard great circle when measuring longitude. This great circle is the meridian. The standard meridian is the prime meridian. By international agreement in 1884, the meridian adopted as the prime meridian was the one on which Greenwich Observatory (near London, England) was located. This is was the 0° longitude.

The longitude of a position is also described as being east or west of Greenwich. You can subdivide the degree into smaller units, as in the decimal system. The more

Interaction Available

common method of subdivision is to divide each degree into 60 minutes (´) of 60 seconds (´´) each. Another method is to divide the degree into 60 minutes and tenths of minutes.

To convert minutes into decimals of degrees, or to convert seconds into decimals of minutes, divide by 6. Thus: 15°30´ = 15.5´, and 15°30´24´´ 15°30.4´.

### Variation

As stated under the definitions of poles, the earth's true (geographic) poles and its magnetic poles are not at the same locations. Also, the location of the magnetic poles changes slightly over the years. In 1960, the north magnetic pole was at latitude 74.9°N and longitude 101.0°W. The southern pole was at latitude 67.1°S and longitude 142.7°E. Thus, a given line will have a different direction to the true North Pole than to the magnetic North Pole. In addition, lines of magnetic force are not generally straight lines because of irregular iron deposits near the earth's surface. Since a compass needle aligns to the lines of force at its location, it may not point to true or magnetic north. The locations on the earth where the compass does point to true north, when connected together, form an irregular line. This is the agonic line. At other locations, the earth's magnetic field direction may not be the same as the direction of the magnetic poles. The angle between the direction of true north and the direction of the earth's magnetic field is the location's variation. This same angle is also often called the angle of declination. You label variation (or declination) east or west as the magnetic field direction is east or west, respectively, of true north. See *Figures 7-6 and 7-7*. Lines connecting locations having the same variation are isogonic lines.

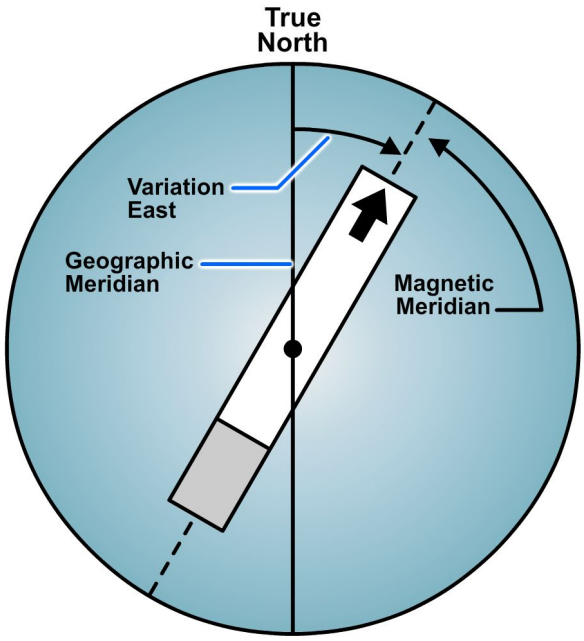


**Figure 7-6 — Easterly magnetic variation.**

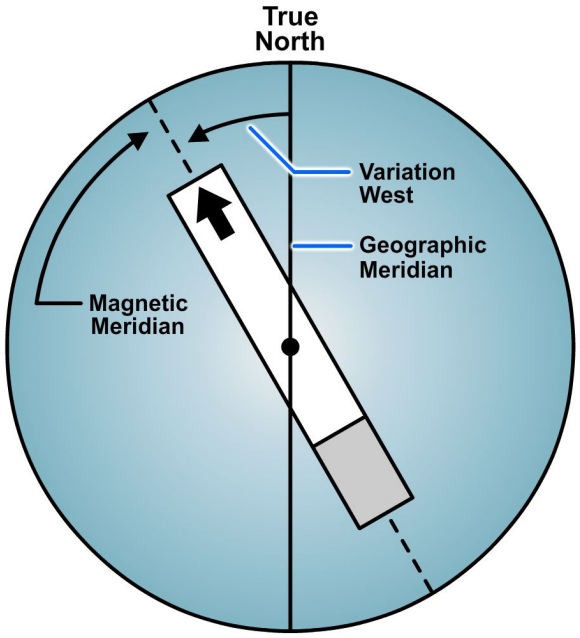


**Figure 7-7 — Westerly magnetic variation.**

## Deviation

Deviation is the error in a magnetic compass caused by nearby magnetic influences. These influences may be caused by magnetic material in the structure of the aircraft and to electrical (electronic) circuits. These magnetic forces deflect a compass needle from its normal alignment with the earth's magnetic field. You express the amounts of such deflections in degrees. The deflection will be east or west as the compass points east or west, respectively, of the earth's magnetic lines of force. Deviation varies with the heading of the aircraft. *Figure 7-8* shows one reason for this deviation.

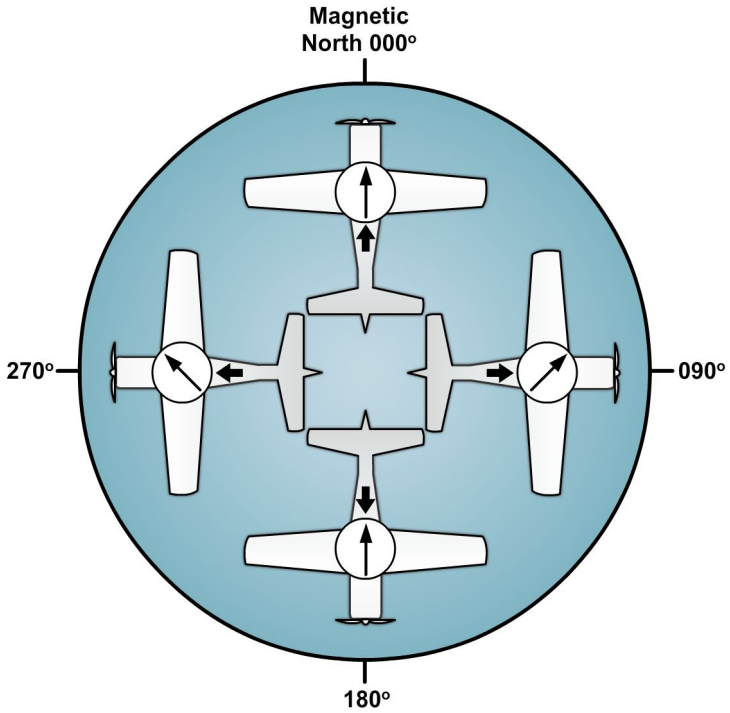


**Figure 7-8 — Deviation changes with heading.**

For example, suppose that you represent the net result of all magnetic forces inherent in an aircraft by an arrowhead in the aircraft's longitudinal axis and aft of the compass. If the aircraft is heading toward magnetic north, the magnetic forces (arrowhead) attract the south-seeking end of the compass needle. However, they don't change the needle's direction because the inherent magnetism has the same polarity as the earth's field. Now, suppose that the aircraft takes an east magnetic heading. The aircraft's magnetic forces now repel the north end of the compass needle and attract the south end, causing easterly deviation. The figure also shows that the deviation when heading south is zero and when heading west is westerly. You can reduce deviation by changing the position of small compensating magnets in the compass case. However, it is usually not possible to remove all the deviation on all headings. You must determine the residual deviation for each compass installation and record it on a deviation card. The card shows the actual deviation on various headings or, more frequently, the compass headings for various magnetic headings. You can accomplish this using a process known as compass swinging.

### Compass Error

The net result of both variation and deviation is the compass error. If variation and deviation have the same name (east or west), you add to get compass error. If they have different names, subtract the smaller from the larger. Give the difference given the name of the larger. See *Figure 7-9*. You can label variation and deviation plus (+) if east, and minus (–) if west. In this case the compass error is the algebraic sum of the two.

Example 1

| | |
|---|---|
| Given: | Variation 7˚ west (W), deviation 2˚ west (W). |
| Required: | Compass error. |
| Solution: | 7˚W + 2˚W = 9˚W. To fly a true course of 135˚, this aircraft over this spot on the earth would fly a compass heading of 144˚. |

Example 2

| | |
|---|---|
| Given: | Variation (–)2˚, deviation (+)5˚. |
| Required: | Compass error. |
| Solution: | (–)2˚ + 5˚ = (+)3˚. |

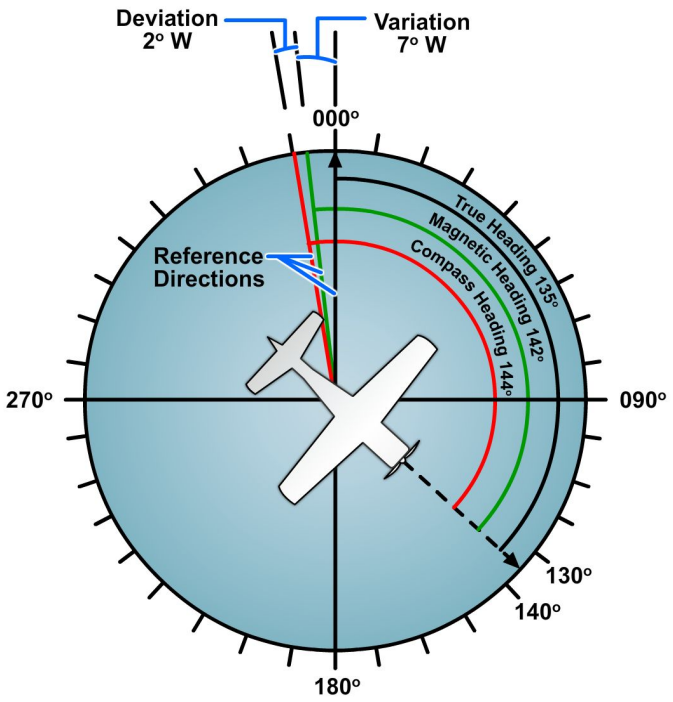


**Figure 7-9 — Effect of compass error.**

### Magnetic Dip

At the magnetic poles, the direction of the earth's magnetic field is vertical (perpendicular to the earth's surface). Along the aclinic line (sometimes called the magnetic equator), roughly half way between the poles, the field's direction is horizontal (parallel to the earth's surface). The difference between the direction of the earth's field and the horizontal at any location is the magnetic dip. The magnetic dip varies from very small angles near the equator to very large angles near the poles. You can measure the angles with a dip needle, which is a magnetic needle free to turn about a horizontal axis. At San Francisco the dip angle is about 62°. A line connecting all locations having equal dip angles is an isoclinic line.

The total intensity of the magnetic field is along the dip angle. However you can show it as two components—vertical and horizontal *(Figure 7-10)*.

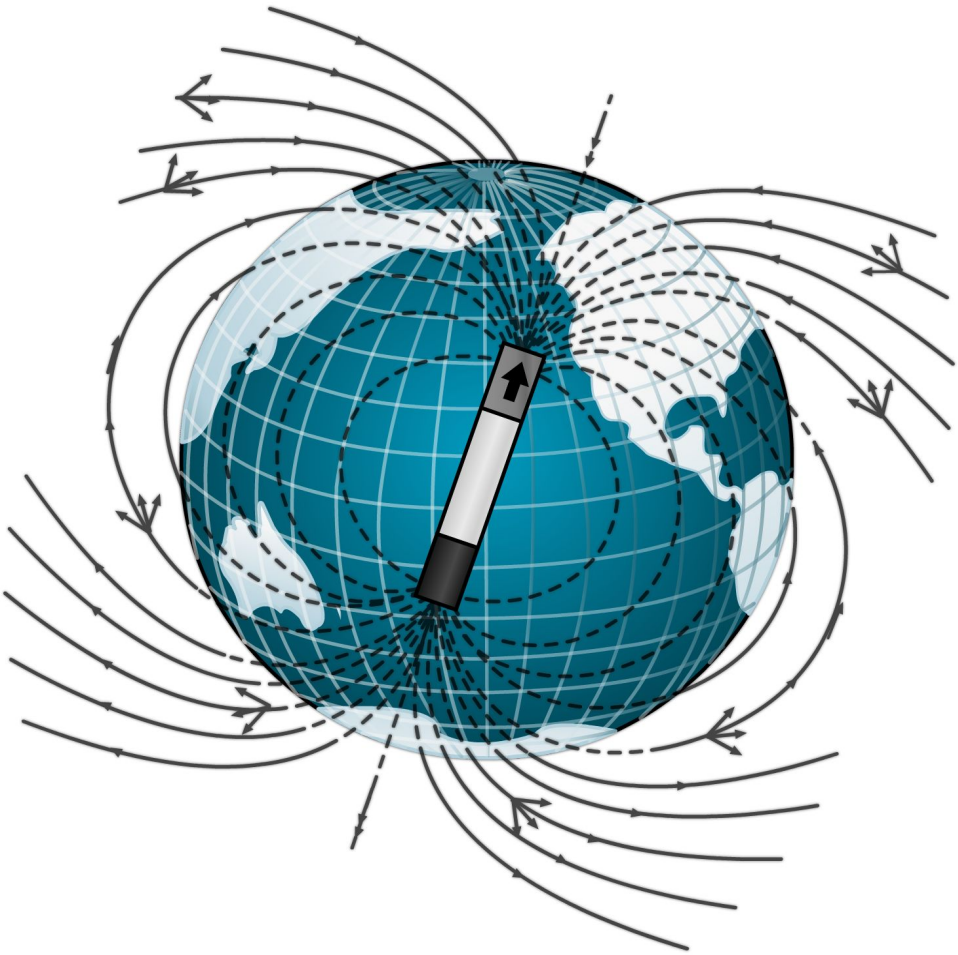

**Figure 7-10 — The earth's magnetism.**

Only the horizontal component is effective as a directive force for a magnetic compass (wet compass). It loses its effectiveness near the magnetic poles because of the weak horizontal component there. The vertical component causes errors in a magnetic compass during aircraft maneuvers that tilt the compass card east or west. If an aircraft heading east increases its speed, or one heading west decreases its speed, the compass card tilts. A turn to the east from a north or south heading will also tilt the floating compass card In both cases, the east side of the card sinks and the west side rises. The vertical component of the earth's field causes the compass card to rotate to the east when in the northern hemisphere. It will cause the card to rotate west when in the southern hemisphere. The amount of error is zero at the aclinic line, and it increases toward the magnetic poles. Therefore, precise turns are difficult if referenced to such a compass.

### Pilotage

Pilotage is the directing of aircraft from point to point by visual or radar observation of landmarks. These landmarks are either previously known or recognized from a chart. It is similar to taking a trip by automobile where the highway is the course taken and the

towns are the check points. This method has obvious limitations if the flight is made over a large body of water or a poorly charted area, or in darkness, rain or fog. Therefore, whenever possible, use pilotage in conjunction with other methods of navigation.

### Dead Reckoning

Dead reckoning is the process of determining a current position from the record of a previously known position, course, speed, and time traveled. To be accurate, you must consider every change of course and speed during the flight. It does not matter whether the pilot or the air mass (wind) through which the aircraft is flying makes the changes.

### Radar Navigation

Modern radar can be a valuable aid to navigation. Some radars present a map like display of the terrain around the aircraft on the screen of a Cathode-ray Tube (CRT). This allows pilotage to go beyond some of the limitations of visual observations.

Radar transponders are devices that do not operate until interrogated or triggered into action by a suitable signal from another radar transmitter. Then, they transmit their own signal, which the interrogating radar receives. These are used both for fixed navigational aids, such as radar beacon stations and for airborne Identification Friend or Foe (IFF) systems.

Doppler radar can detect and show actual ground speed and drift of an aircraft, regardless of wind speed or direction.

Radar altimeters give the actual distance from the aircraft to the surface below. The surface below can be a body of water or land masses far above sea level.

### Radio Navigation

Radio navigational aids vary from a fairly simple direction-finding receiver to complex systems using special transmitting stations. These special stations make it possible to fix the position of an aircraft with considerable accuracy. The usable range varies according to its intended use and also with weather and ionospheric conditions. Beacon stations associated with an Instrument Landing System (ILS) are usually of low power. Long-range Air Navigation (LORAN) stations have a range extending to 1,400 miles under favorable conditions. Aviation Electronics Technicians (ATs) maintain the airborne portions of radio and radar systems.

### Celestial Navigation

Celestial navigation is the method of fixing the position of the aircraft relative to celestial bodies. Since the earth is constantly revolving, an accurate time device is necessary. You may use a sextant to measure the angle of the celestial bodies with respect to the horizon. In marine navigation, the visible horizon is the reference. In air navigation, you use an artificial horizon as the reference point. Also, the navigator needs an almanac to determine the celestial equator system coordinates at the time of observation.

The usual method to show a line of position from celestial observation consists of (1) observation, (2) coordinate conversion, and (3) plotting. The navigator tries, whenever possible, to select three bodies about 1200 apart in azimuth. This not only results in lines of position that cross cleanly, it also minimizes the effects of a constant error on the observations.

## Inertial Navigation

INS are dead reckoning devices that are completely self-contained, which include a computer and platform or module containing accelerometers, gyroscopes, or other motion sensing devices. They are independent of their operating environment, such as wind, visibility, or aircraft attitude. They do not radiate or receive radio frequency RF energy; therefore, they are impervious to countermeasures such as jamming. Gyros measure the angular velocity of the system. When the gyros use the original orientation of the system as the initial condition and integrate the angular velocity, the system's current orientation is known at all times.

Accelerometers measure the linear acceleration of inertial reference that only is measured relative to the moving system. This can be thought of as a passenger of a train feeling pressed back as the train accelerates (whether forward, backward, left, right, up or down. Inertial navigation systems make use of the physical laws of motion that Newton described three centuries ago. One advantage of an INS is it requires no external references in order to determine its position or orientation. Of course, you must provide and enter the starting position into the system. When known positions are available, you may correct or update the system if an error exists.

Inputs to the system are from acceleration detectors that measure the rate of change in the motion of the aircraft. The first integral of acceleration is velocity. Velocity results when acceleration is integrated with respect to time. For example, a body starts from rest and constantly accelerates at 8 feet per second for 11 seconds. The velocity at the end of this time would be 88 feet per second (60 miles per hour). However, in actual practice, acceleration is not always this constant. The integration of acceleration is the process of summing all minute acceleration-time increments over a given amount of time.

By integrating velocity with respect to time, the result is displacement (distance). Therefore, the second integral of acceleration is displacement. The inertial navigator's purpose is to keep track of position and not the total distance traveled. This causes the system to integrate all values of acceleration (positive and negative) detected over the time involved.

If the earth were flat and vehicles traveled only on the earth's surface, a two-axis inertial navigation system could plot the position using two accelerometers. One accelerometer would be sensitive along the x-axis (E-W) and the other sensitive along the y-axis (N-S). The important point to note about detecting acceleration of a body is that each accelerometer detects only the component of the resultant acceleration along its sensitive axis. They have no way of telling whether the detected velocity change is due to a speed change or a direction change or both. It does not matter what forces cause the velocity change. Neither can the accelerometer distinguish between the acceleration of the vehicle and the pull of gravity. Therefore, if the accelerometer tilts off its level, its output will include a component of gravity as well as vehicle acceleration. To get the correct vehicle acceleration in the horizontal plane, the sensitive axis of the accelerometer must be perpendicular to the gravitational field.

However, the earth is not flat and not exactly round. Its radius at the poles is less than its radius at the equator. It also spins about its polar axis. A spinning gyro in gimbals tries to maintain a fixed direction in relation to space rather than to any point on Earth. Consider a gyro at the equator with its spin vector direction east, toward the morning sun. After 6 hours of Earth rotation, the spin vector would be up in relation to the earth's surface. After 12 hours it would be west. After 18 hours it would be down; and after 24 hours it would be east again. Now consider a spinning gyro with its spin axis parallel

with the earth's axis of rotation. At the equator it is parallel with the earth's surface. However, as it moves to the North Pole, it becomes vertical to the earth's surface. You must take all of these items into account and correct for them. So, to navigate on the earth requires a highly complex inertial system, each component of which is capable of extreme accuracy.

A four-gimbal system allows the platform to retain the original orientation regardless of what maneuvers the aircraft makes. This allows the platform to serve as a level mount for the accelerometers. The stable platform contains two identical floated, two-degree-of-freedom gyros. They mount with their spin axes horizontal and at right angles to each other. Using the gyroscopic principle of precession, it is possible to apply a continuous torque to the appropriate axes. This action reorients the gyros to maintain the stable platform horizontal to the earth's surface and pointed north. An electronic analog computer develops the signals necessary to properly torque the gyros. The correct ions for Earth rate depend on the aircraft's position on the earth's surface.

Some systems use as many as three accelerometers. Two are horizontal with one sensitive to north-south acceleration and the other sensitive to east-west acceleration. The third accelerometer mounts to determine vertical acceleration. A computer subtracts the gravity component from the output of the vertical accelerometer. A more detailed description of an INS follows later in the chapter.

# AIRCRAFT COMPASS SYSTEMS

Countless navigational devices and methods have been invented and devised. In the present era, with its supersonic speeds, accurate determination of direction has become increasingly important. An error of only a few degrees in a space of minutes will carry the modern aviator many miles off course.

During the early days of aviation, direction of flight was determined within the aircraft chiefly by direct-reading magnetic compasses. Today the direct-reading magnetic compass still finds use as a standby compass should the more sophisticated compass systems fail.

## Compass System Sensors and Indicators

In chapter 6, the heading indicator is mentioned as a flight instrument. This instrument is part of the primary heading reference system. The heading indicator receives electrical/electronic signals from various components in the system and shows the pilot aircraft heading in degrees.

Sophisticated navigation systems and weapons delivery systems require aircraft heading information in electrical/electronic signal form. In this form, the information goes to computers, indicators, and other components. Also, by using these signals, indicators can include aircraft heading along with other information in a single instrument.

### Compass Transmitter

The compass transmitter, commonly called a flux valve, detects the horizontal direction of the flux lines of the earth's magnetic field. It is usually mounted within the wing or tail of an aircraft as this area has the lowest aircraft-induced magnetic fields *(Figure 7-11)*. It consists of a hermetically sealed hemispherical bowl containing a sensing element in a damping fluid. The bowl permits the sensing element up to 30 degrees of freedom in the aircraft's yaw and roll axis, while prohibiting rotation about the pitch axis.

The core of the flux valve is a good conductor of magnetic lines of force as it has a high permeability. It is shaped like a three-spoke wheel, as shown in *Figure 7-12*. Because the flux valve's core is magnetically sensitive and allowed free movement within the mount, the earth's magnetic lines of force will cause the core to move into alignment with the earth's magnetic field. The damping fluid is used to "dampen" the inertial effects of aircraft/mount movement as the aircraft maneuvers. The mount that is attached to the aircraft is in constant alignment with the aircraft's heading so in effect the mount moves around the core with aircraft heading changes. The core's legs are connected in a wye configuration, 120° apart, and have copper windings through which an induced current will flow. The amount of flux and current flow in any one leg is proportional to the angular position of the leg relative to the earth's magnetic lines of flux.

**Figure 7-11 — Compass transmitter.**

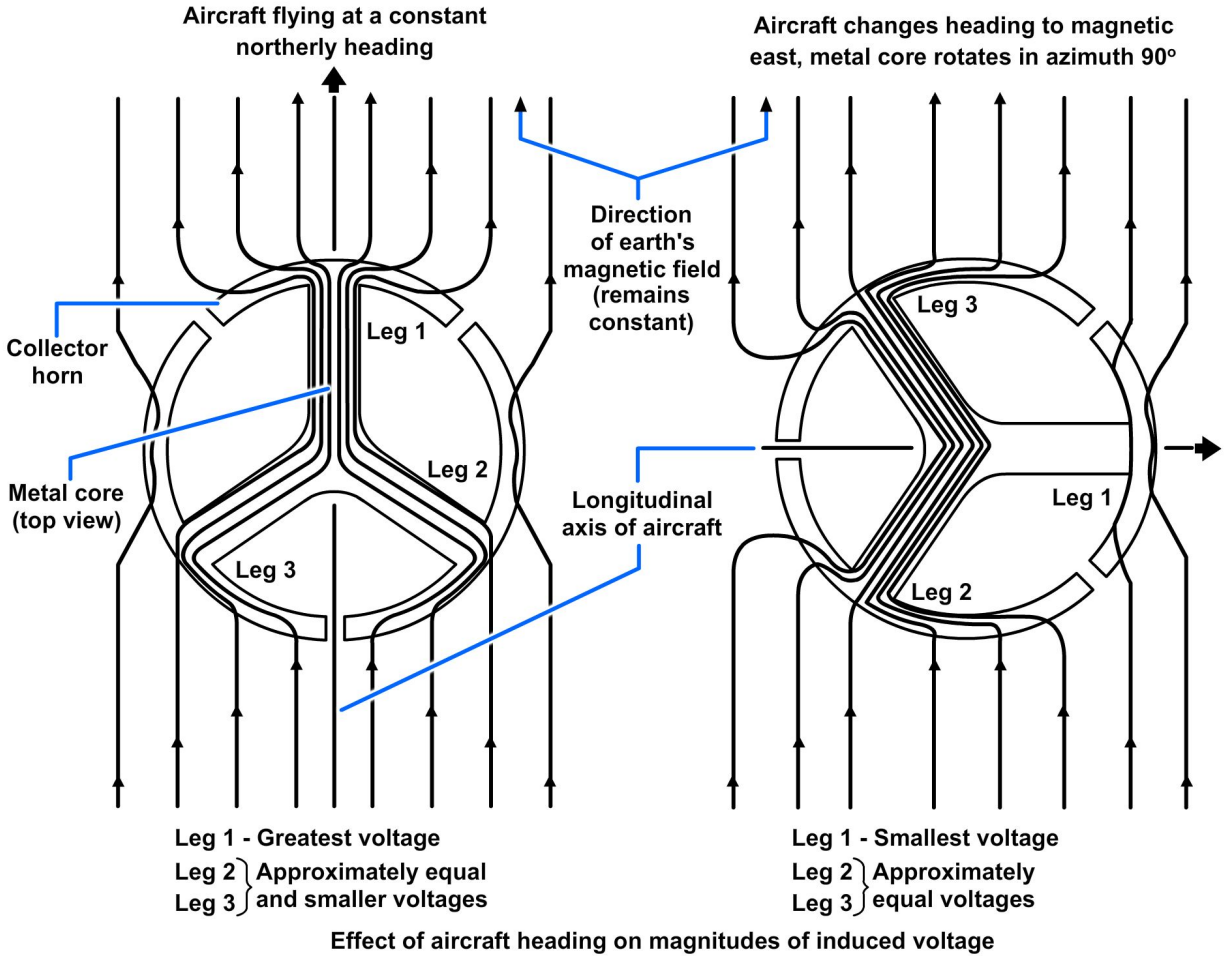


**Figure 7-12 — Flux valve heading changes.**

There is an exciter coil which is wound around the hub of the core, corresponding to the axle of a wheel. This coil receives 400 Hz ac power. This coil is the primary, and the signal pickup coils in the legs are the secondary. The design of the core and windings prevents transformer action between the coils but the purpose of the primary winding and its applied voltage is to produce a magnetic field. This magnetic field changes the reluctance of the core which is driven to saturation at the peak of each positive and each negative portion of the 400 Hz cycle. The core's inductance properties are also affected by the legs' position relative the earth's magnetic lines of flux which further affects the induced current flow through each of the core's legs. The applied control flux prevents the earth's magnetic field from entering the core during the saturation highs and lows. When the driving flux is reduced during the transition the earth's magnetic field enters the core producing an induced signal output.  Above the core the mount contains pickup windings. These pickup windings receive an induced voltage from each of the core's legs. As the mount moves in relation to the core, which tries to maintain alignment with Earth's magnetic field, the voltage induced into the mount winding provides voltage that is indicative of mount position from the magnetic north relationship of the core. This proportional voltage is used to drive indicators and provide reference for gyroscopic instruments so that heading can be determined relative to magnetic north.

All compass systems must be periodically calibrated. Attached to the top of the compass transmitter is a compensator assembly, see *Figure 7-13.*  It consists primarily of two sets of two small permanent bar magnets. You can change the relative azimuth position of each set by rotating a screw on the outside of the unit. These screws position the magnets by a gear train. One adjusting screw adjusts for north-south compensation, and the other screw adjusts for east-west compensation.

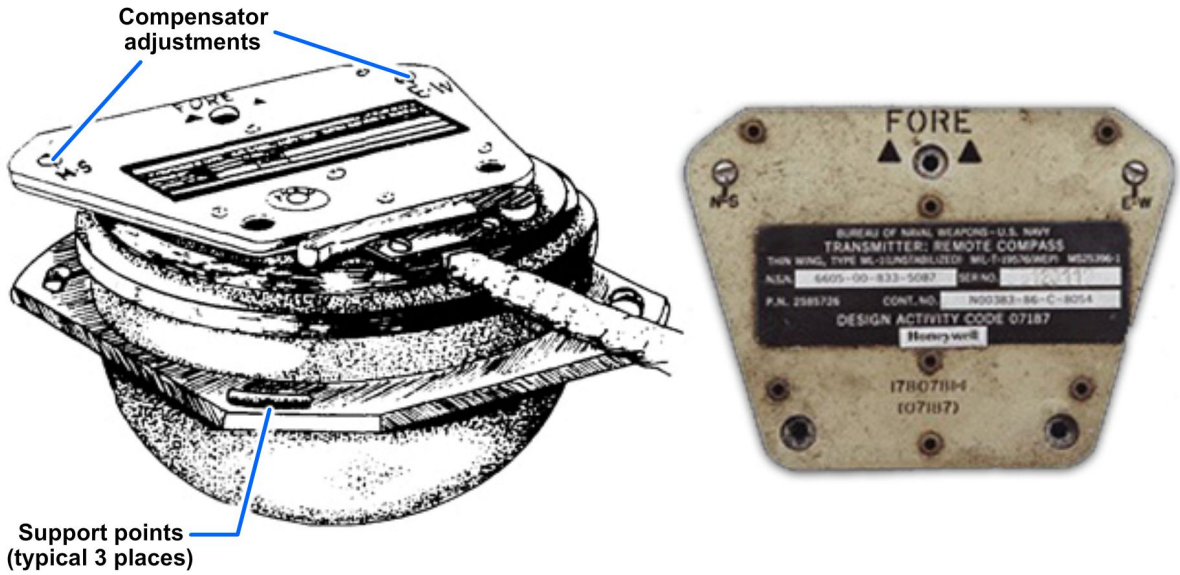


**Figure 7-13 — Compass transmitter and compensator.**

Two wiring symbols for the flux valve are shown in *Figure 7-14*. To distinguish them from synchro units, the words “compass transmitter” or “flux valve” are usually included in the drawing.

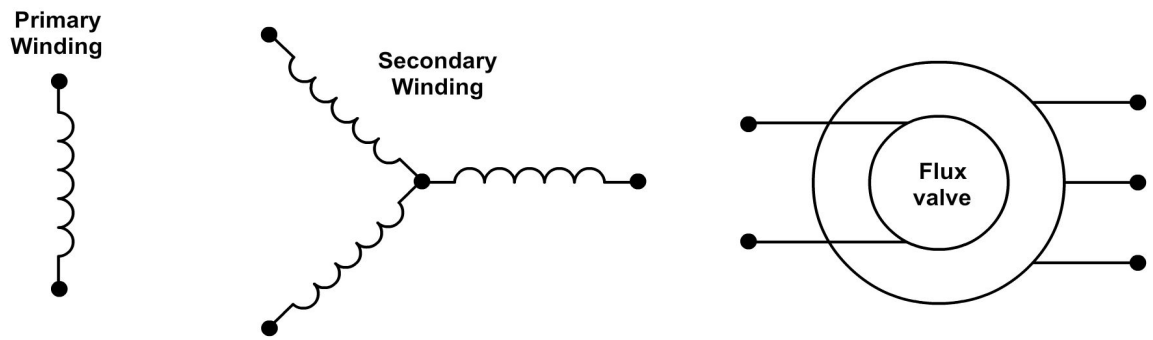


**Figure 7-14 — Compass transmitter schematic and functional symbols.**

### Displacement Gyroscope Assembly

The displacement gyroscope *(Figure 7-15)* is a hermetically sealed, two-gyroscope platform providing pitch, roll, and azimuth signals to the system indicating instruments. The vertical gyroscope provides a source of pitch and roll information, while the directional gyroscope provides azimuth (yaw, heading) information. Control transmitters (synchros) convert attitude changes into electrical signals that represent pitch, roll, and yaw.

Erection circuits maintain the spin axis of the vertical gyroscope in a gravity vertical position. These circuits consist of a roll electrolytic switch, with associated roll torquer, and a pitch electrolytic switch, with associated pitch torquer. A servo loop maintains the spin axis of the directional gyroscope level. The loop consists of a leveling pickoff, an external leveling amplifier, and a leveling torquer.

**Figure 7-15 — Displacement gyroscope.**

The vertical gyroscope spin motor mounts in the inner roll gimbal, which is free to move in a roll direction. The freedom of movement in the roll direction is limited to ±82° by mechanical stops to prevent gyroscope gimbal lock. Gimbal lock would

occur if the vertical gyroscope spin axis were to become aligned with the vertical gyroscope pitch gimbal. The directional spin motor mounts in the directional gyroscope leveling gimbal. This gimbal is free to move in a roll direction. Mechanical stops also restrict the freedom of the leveling gimbal to ±82°, preventing gimbal lock. These stops also prevent the inversion of the leveling and inner roll gimbal during gyroscope rotor coastdown after system shutdown.

The displacement gyroscope assembly consists of a Vertical Gyro (VG) and a Directional Gyro (DG). These gyros mount in a common outer roll gimbal. The vertical gyro provides pitch and roll signals and the directional gyro provides heading (azimuth) signals. Erection and leveling servo loops erect and maintain the spin axis of the vertical gyro gravity vertical and the directional gyro spin axis parallel to the earth. Roll, pitch, and azimuth control transmitters convert aircraft attitude and heading into electrical signals.

The outer roll gimbal is the outermost gimbal for both the vertical and directional gyroscopes. Pitch control transmitters detect pitch movement of the outer roll gimbal about the vertical gyroscope pitch gimbal. The outer roll control transmitter and directional gyroscope control transmitter mount between the outer roll gimbal and gyroscope case (frame). However, they mount at opposite ends. They sense roll movement of the aircraft (and frame) about the outer roll gimbal.

The azimuth gimbal may settle at any random heading during power application. Therefore, you must slave the directional gyroscope's initial azimuth signal to the flux valve. Also, you can correct it manually to a known magnetic heading. You must do this so the azimuth signal reflects actual aircraft heading. The two azimuth control transmitters, between the azimuth gimbal and the directional gyroscope pitch gimbal, will then furnish information on any further change in aircraft heading.

The displacement gyroscope incorporates snubbers. They maintain the approximate normal position of the outer roll gimbal and the directional gyroscope pitch gimbal when power is removed. Upon application of power, the snubbers energize, removing their snubbing action. The motor-generator and gear assemblies that drive the gyroscope gimbals have enough power to override the snubbing action should a snubber failure occur.

## Vertical Gyroscope Operation

Refer to *Figure 7-16* as you read this section. The vertical gyro consists of gyro spin motor B101 (which is the inner roll gimbal) and the vertical gyro pitch gimbal. It also includes the outer roll gimbal and the frame. The frame mounts to the assembly case and follows all aircraft maneuvers. The outer roll gimbal mounts in the frame. It may rotate 360° about the roll axis but follows the aircraft in pitch and yaw.

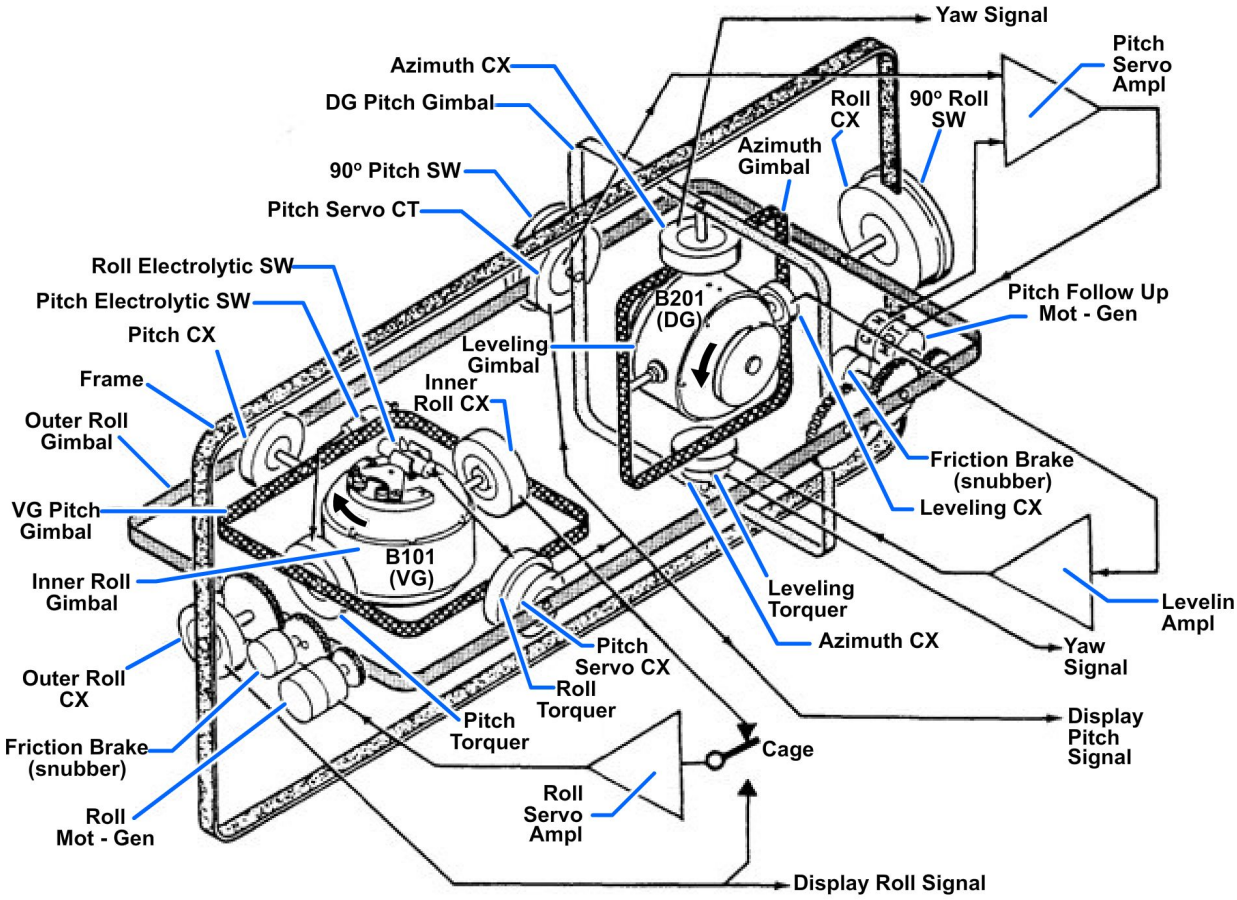


**Figure 7-16 —Typical displacement gyro and servo loops.**

The vertical gyro pitch gimbal mounts in the outer roll gimbal. This gimbal may rotate 360° about the pitch axis but follows the outer roll gimbal movements in roll and yaw. The gyro spin motor may rotate ±85° in roll but follows the vertical gyro pitch gimbal in pitch and yaw. Mechanical stops (not shown) limit inner roll gimbal movement to prevent B101's spin axis aligning with the vertical gyro pitch gimbal axis. Such an alignment would cause the vertical gyro pitch gimbal to spin about its pitch axis (gimbal lock).

**Leveling –** At power application, a friction brake (snubber) releases the outer roll gimbal from the frame. The gyro spin motor starts, and electrolytic switches sense unlevel conditions in pitch and roll. The output of the electrolytic switches activates the torquers. The gyro reacts to the applied torque and precesses until the electrolytic switches are level. The inner roll control transmitter is mounted between the vertical gyro pitch gimbal and the inner roll gimbal. This transmitter applies signals to the roll servo amplifier to

drive the roll motor-generator. The roll motor-generator, in turn, drives the outer roll gimbal to the level of the inner roll gimbal.

**Pitch Sensing –** As the aircraft pitches, the outer roll gimbal follows, but the vertical gyro pitch gimbal remains level. The pitch servo control transmitter detects the pitch attitude and applies pitch signals to the indicators and other aircraft systems. The pitch control transmitter applies pitch signals to the Automatic Flight Control System (AFCS) control amplifier.

**Roll Sensing –** As the aircraft rolls, B101 remains level, but the vertical gyro pitch gimbal rolls (with the outer roll gimbal). The inner roll control transmitter senses the difference. It then causes the roll amplifier to drive the roll motor-generator until the outer roll gimbal is level with B101. The outer roll control transmitter (on front end of frame) detects and applies roll signals to indicators and other systems. The roll control transmitter (on aft end of frame) applies roll signals to the AFCS control amplifier.

### Directional Gyroscope Operation

The directional gyro consists of gyro spin motor B201 (including a leveling gimbal), an azimuth gimbal, and a directional gyro pitch gimbal. The directional gyro pitch gimbal mounts in the outer roll gimbal. The pitch gimbal may move 360° about the pitch axis, but it follows the outer roll gimbal in roll and yaw. The azimuth gimbal mounts in the directional gyro pitch gimbal. It may move 360° about the yaw axis; however, it follows the directional gyro pitch gimbal in pitch and roll. B201 mounts in the azimuth gimbal. B201 is limited to ±85° by mechanical stops (not shown) to prevent gimbal lock.

**Leveling –** The leveling control transmitter output goes to the leveling amplifier, which drives the leveling torquer. When the leveling torque moves the azimuth gimbal, B201 precesses until the leveling control transmitter senses a level condition. The directional gyro pitch gimbal is servoed to the vertical gyro pitch gimbal and maintained perpendicular to the surface of the earth. The pitch servo control transmitter output, through the pitch servo control transformer, is amplified and drives the pitch follow-up motor-generator. The motor-generator positions the directional gyro pitch gimbal.

**Azimuth Sensing –** The azimuth gimbal may settle at any random position in yaw. The only forces acting on the gimbal are gyro rigidity, apparent (Earth rate) precession, and the leveling torquer. Azimuth sensing in the directional gyro operating mode is reliable only after setting the correct heading into the system with the SET HDG control. Two azimuth control transmitters sense any movement of the directional gyro pitch gimbal about the azimuth gimbal. The yaw signal of one azimuth control transmitter goes to the attitude indicator. The yaw signal of the other azimuth control transmitter is processed in the compass adapter-compensator and applied to other aircraft systems.

## Aircraft Horizontal Flight Indicators

Horizontal Indicator (HI), shown in *Figure 7-17,* sometimes called Horizontal Situation Indicator (HSI), shown in *Figure 7-18,* is used primarily to provide visual information concerning aircraft attitude, steering, and navigation on a CRT display or mechanical dial indicator.

The symbols to make up the display are generated by a separate computer or dedicated Electronics Control Amplifier (ECA). Depending on the aircraft this indicator can also provide steering and navigation information with a Tactical Aircraft Moving Map Capability (TAMMAC) superimposed over the display. The internal Digital Map Computer (DMC) controls the map positioning through map data loaded into a Memory Unit (MU) with Personal Computer Memory Card International Association (PCMCIA) cards.

**Figure 7-17 — Horizontal indicator.**

Communication between the computer, MU and HSI occurs over the High Speed Interface Bus (HSIB) or Multiplex Bus (MuxBus).

The HSI system functions as a selectable display for the navigational systems on an aircraft. Selectable between INS, Tactical Air Navigation-TACAN or ILS systems, the corresponding system will provide radial bearing and bearing information, NAV flag, course deviation, and To-From signals to the HSI. The bearing signal will position the bearing pointer 1 or bearing pointer 2, as selected. Magnetic and true heading information is supplied to the HSI compass card by the INS, AHRS, or a compass transmitter, as selected. Magnetic heading is normally used to position the compass

**Figure 7-18 — Horizontal situation indicator.**

card. When a tactical mode is selected, magnetic heading information is switched out of the circuit, and the compass card will be driven by the true heading information.

The Bearing-Distance-Heading Indicator (BDHI) is similar to HI and HSIs and may be used with various navigational systems, and it provides information according to the mode selected. Some aircraft may have more than one BDHI, with separate select switches for each instrument. The distance counter numerals may be in a vertical row or horizontal, as shown in *Figure 7-18*. The lubber index is a fixed reference mark that allows the operator to read the heading from the BDHI.

For detailed operation of the HI, HSI and BDHI systems, refer to the applicable Maintenance Instructions Manual (MIM).

**Figure 7-19 — Bearing-distance-heading indicator.**

### Amplifier Power Supply

The amplifier power supply *(Figure 7-20)* contains the following components:

- An ac and a dc power filter
- Two power supply modules
- A roll driver amplifier
- Roll, pitch, and leveling servo amplifiers
- A leveling modulator
- A servo failure monitor module
- Two thermal relays
- Ten control relays

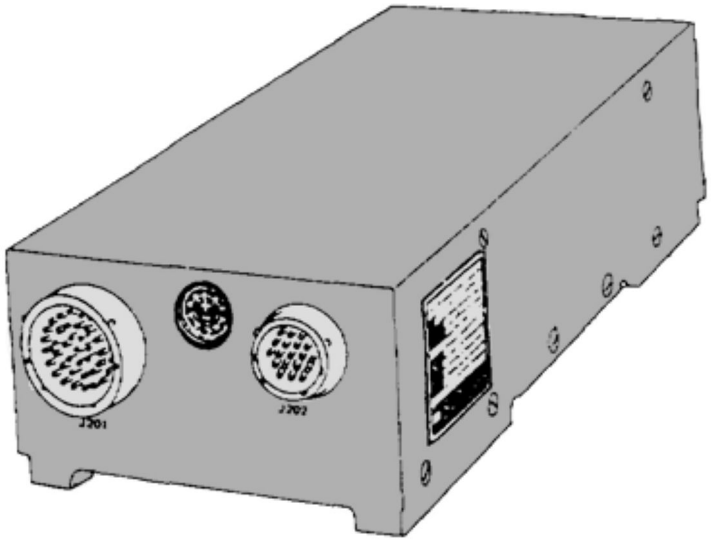

**Figure 7-20 — Amplifier power supply.**

The amplifier power supply provides the timing, switching, and voltages required for the start cycle; erection voltage control during system operation; monitoring roll and pitch signals and the neutral power lead of the vertical gyroscope motor; and the roll, pitch, and leveling amplifiers required for control of the displacement gyroscope gimbals.

Aircraft three-phase power goes to the amplifier power supply. It then routes through the ac power filter. The filtered three-phase power then goes to other system components. A power supply connected to all three legs of the three-phase power provides 28-volt dc, which goes to a filter. System components use both filtered and unfiltered dc. The second power supply is a three-section supply. Each section is independent of the others and supplies 95 volts dc. The dc outputs connect to various control relays within the amplifier power supply.

The output from the displacement gyroscope photoelectric pickoff is a dc voltage. A leveling modulator converts it to a 400-hertz ac voltage. The amplitude and phase of the modulator output depends on the amplitude and polarity of the dc voltage from the photoelectric pickoff. The 400-hertz ac voltage goes to the leveling amplifier; then the amplified signal goes to the directional gyroscope leveling torquer control winding.

Roll and pitch error signals from the displacement gyroscope are amplified by the roll and pitch amplifiers. After amplification, the signals go to the displacement gyroscope for application to the roll and pitch motor-generator control windings. The roll and pitch motor-generators drive the displacement gyroscope roll and pitch gimbals.

Two thermal relays and nine control relays perform the timing and switching required for the start cycle. The start cycle is of 60 seconds duration. However, certain conditions change after the first 12 seconds. High pitch erection voltage goes to the pitch torquer for the complete start cycle. High roll erection voltage goes to the roll torquer after 12 seconds and continues until the completion of the start cycle.

After the first 12 seconds, motor excitation voltage increases, and the gyroscope motors attain operating speed. After completion of the start cycle, two additional relays provide roll and pitch erection cutout during specific aircraft maneuvers.

### Compass Adapter Compensator

The compass adapter compensator *(Figure 7-21)* receives heading information from the flux valve and the displacement gyroscope. It processes this information according to the azimuth mode selected by the compass controller. It then provides corrected heading signals to the heading indicator and other aircraft systems. The compass adapter compensator can operate in the following modes: free, compass, and slaved.

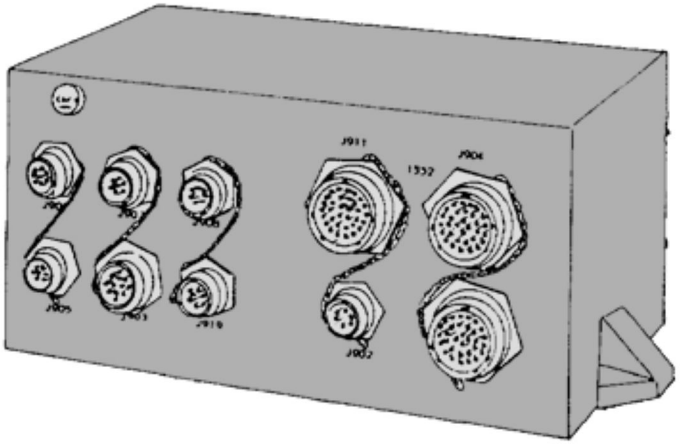

**Figure 7-21 — Compass adapter compensator.**

In the free mode of operation, you engage the PUSH TO TURN control on the compass controller to set actual aircraft heading. This establishes an initial azimuth reference. As aircraft heading changes, an azimuth synchro on the directional gyro measures the relative change between the aircraft and the directional gyroscope. The signal goes to the compass adapter, which makes corrections for real and apparent drift. The compensating signal for apparent drift is derived from a resolver in the compass controller. The EARTH RATE CAL variable resistor in the compass adapter adjusts this signal. Real drift is caused by mechanical imperfections in construction of the directional gyroscope. The compensating signal for real drift develops across the compass adapter GYRO DRIFT COMPENSATION POT variable resistor. This resistor has a dial calibrated in degrees per hour. The corrected information goes to external aircraft system components through five heading repeater synchros.

When operating in the compass mode, the 24-point compensation network corrects the flux valve signal for deviations. This signal goes as an error signal to the azimuth servo loop, resulting in corrected azimuth information (angle data shaft). Again, this information goes to external aircraft system components through five heading repeater synchros.

In the slaved mode, the directional gyroscope azimuth information and a compensated flux valve heading correction signal go to a differential synchro in the compass adapter. This slaves or synchronizes the gyroscope azimuth output to the flux valve heading, providing a heading output rather than a displacement output. Fast synchronization starts when the slaved mode is selected and is maintained until close alignment is achieved. Slow synchronization is applied continuously while operating in the slaved mode.

## Compass Controller

The compass controller *(Figure 7-22)* provides switching functions, latitude compensation signals, and slew signals to the system compass adapter. The compass controller also monitors and provides a visual display of the synchronization between the azimuth heading output and the flux valve.

The compass controller can operate in three modes—slaved, free, and compass. The compass controller contains a PUSH TO SYNC switch and SYNC IND meter. It also has a PUSH TO TURN control, mode switch (with COMP, SLAVE and FREE positions), and LATITUDE DEGREES control (counter assembly).

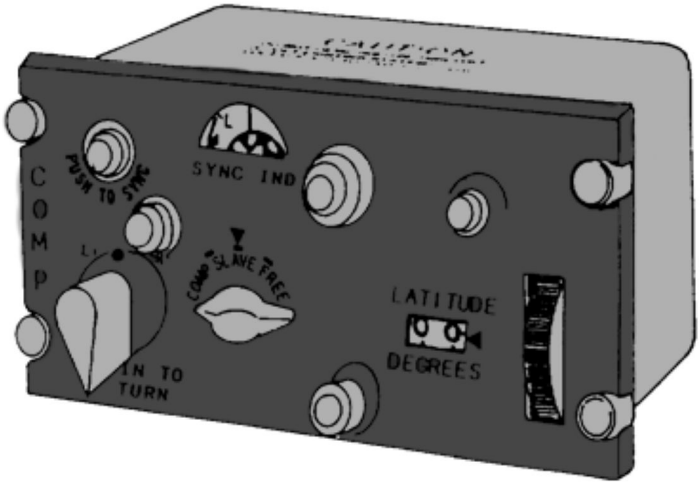


**Figure 7-22 — Compass controller.**

The mode switch selects the FREE (free), SLAVE (slaved), and COMP (compass) modes of operation. To accomplish this, it controls the mode-selecting relays in the system compass adapter. The mode switch also activates the SYNC IND meter during compass and slaved modes.

The PUSH TO TURN control (set heading) provides switching to decouple the autopilot. Also, it controls the direction and rate of slewing for alignment of the system to an azimuth heading. This switching action occurs when using the PUSH TO TURN control to reference the system output to the aircraft heading in the free mode.

The PUSH TO SYNC switch provides switching to synchronize azimuth heading output to the flux valve when operating in the slaved mode.

The LATITUDE DEGREES control, working with a resolver, provides a compensation signal for apparent drift of the directional gyroscope. Apparent drift results from Earth rotation.

The hemisphere switch (N, S) selects the latitude correction signal for the Northern or Southern Hemisphere.

The SYNC IND meter shows the synchronization between the azimuth heading output and the flux valve.

The slaved mode is the normal operating mode except when in an area where the earth’s magnetic field is distorted. The slaved mode synchronizes the directional gyroscope output to the flux valve heading. When initiating the slaved mode, fast synchronization occurs until close alignment with the flux valve heading is achieved.

Free mode is an alternate mode of operation. It is used in areas where the earth’s magnetic field is distorted. When operating in the free mode, only the directional gyroscope output drives the system’s azimuth indicators.

The compass mode is an emergency mode for use when the directional gyroscope fails. Only the flux valve output (compensated) provides heading information.

### Rate Gyroscope

The switching rate gyroscope *(Figure 7-23)* provides a means of interrupting the roll erection and slaving voltage. It is a single-degree-of-freedom gyroscope. It provides gyroscope sensitivity to rates of rotation about the yaw axis of the aircraft. When the aircraft turns at rates of 150° per minute or greater, the gyroscope precesses away from the normal condition. This causes the contacts of a magnetic reed switch to close, energizing a single-stage amplifier. Transistor switching action pulls in a relay, completing the 28-volt dc path to the turn cutout relay coil in the compass adapter.

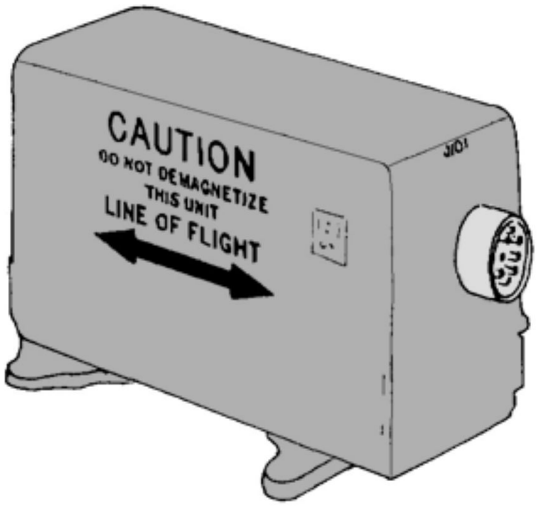


**Figure 7-23 — Switching rate gyroscope.**

### Attitude Indicator

The attitude indicator *(Figure 7-24)* is a three-axis, servo-driven sphere that shows heading and relative roll and pitch attitude of aircraft. Vertical and horizontal pointers provide the pilot with aircraft deviation information from a desired flight path. Signals for operating servo systems of hermetically sealed units are from the displacement gyroscope. Aircraft rate of turn information and vertical displacement deviations from a desired glide path are displayed by a rate of turn pointer and displacement pointer, respectively. Loss of ac power is indicated by a display of a power failure warning flag. Inadequate current to vertical, horizontal, and displacement pointers results in display of respective warning flags. A pitch trim knob lets you adjust the sphere to varying aircraft configurations and reduce parallax error.

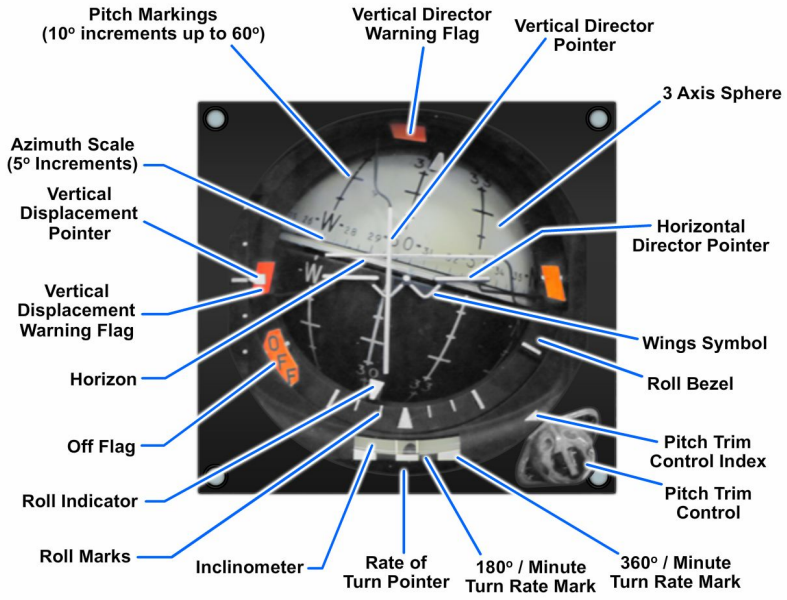


**Figure 7-24 — Attitude direction indicator.**

## INERTIAL NAVIGATION SYSTEM

The following paragraphs describe a heading reference system found on the latest model high-speed aircraft and some patrol aircraft. The INS is sometimes maintained by the Aviation Electronics Technician (AT) rating. Some squadrons use a concept called an Integrated Weapons Team (IWT). It is composed of the three Avionics/Armament Division (Work Center 200) ratings—AT, AE, and Aviation Ordnanceman (AO). Regardless of who maintains the INS, you, must be familiar with the theory and operating principles of such a system.

Basically, navigation can be divided into two categories: (1) position fixing and (2) dead reckoning. In the first category, you determine your position relative to positions of known objects such as stars and landmarks. The most common example of navigation by position fixing is celestial navigation. Use of loran is another example of navigation by periodic position fixes. Dead reckoning, the second category, is the process of estimating your position from the following known information:

- Previous position
- Course
- Speed
- Time elapsed

Two examples of navigation by dead reckoning are Doppler radar and Inertial Navigation Systems.

All navigation systems, except the inertial type, rely on some bit of information external to the vehicle to solve its navigational problem. In this respect, the inertial navigation system stands alone; it is completely self-contained within the vehicle. It is independent

of its operating environment, such as wind, visibility, or aircraft attitude. It does not radiate RF energy; therefore, it is impervious to countermeasures. It does not depend on ground transmission or any other outside source to determine its instantaneous position.

## Basic Principles

The operating principle of the INS is Newton's first law of motion. This law states "Every body continues in its state of rest, or of uniform motion in a straight line, unless it is compelled to change that state by forces impressed on it." In layman's terms, this law says that a body at rest tends to remain at rest. It also says a body in motion tends to remain in motion, unless acted upon by an outside force.

The full meaning of Newton's first law is not easy to visualize in the earth's reference frame because Newton's laws apply to an inertial reference system. You may define an inertial reference system as a nonrotating coordinate frame. It can be either stationary or moving linearly at a uniform speed, in which there are no inherent forces such as gravity.

You can make a simple test of whether you are in a true inertial system by releasing an object and observing its motion. If you release the object without imparting any acceleration to it, the object remains in its position relative to you. If you throw the object, it continues on an undeviating path at a constant speed. Such a system can exist only in empty space, far from any mass, for all masses contain gravitational forces. A reference system attached to the earth can closely approximate an inertial system. For this system to work, you must balance the gravitational force on a body by a second force. For example, an object sliding on a flat, frictionless plane on the earth's surface would move in a NEARLY straight line. The object will have a NEARLY constant speed, as you saw in the earth's coordinate system.

**NOTE**

The word nearly is emphasized because the object will deviate slightly from its straight-line motion. The cause of this deviation is the earth's rotation about its axis.

Newton's second law of motion shares importance with his first law in the inertial navigation system because the inertial navigation system works on Newton's second law. Newton's second law of motion states "Acceleration is proportional to the resultant force and is in the same direction as this force." Thus, the second law is written

$$F = ma$$

where;

F = force

m = mass

a = acceleration

The physical quality in the above equation that pertains to the inertial navigation system is acceleration. You can derive velocity and displacement from acceleration. For

example, consider this fact: Before an object can change its state of rest or state of motion, it must first experience acceleration. Since acceleration is a change in velocity and velocity is a change in position, acceleration is a change in the change of position. However, before any change can have meaning, it must include the unit of time. Therefore, you can define a change per unit of time as a rate of change. Thus, a rate of change of displacement is velocity. A rate of change of velocity is acceleration. A rate of change of a rate of change of displacement is acceleration.

Differentiation is the process of investigating or comparing how one physical property varies with respect to another. Integration, the reverse of differentiation, is the process of summing all rate of changes that occur within the limits under investigation.

The inertial navigation system is not a differentiating system; it is an integrating system. However, before integration can be done, it must first have a rate of change. Therefore, the inertial navigation system, when stripped to its barest essentials, is a detector and an integrator. It first detects changes of motion. It then integrates these changes of motion with time to arrive at velocity, and again with time to arrive at displacement.

### Fundamentals of Integration

Since an INS performs integration, the following is a review of integrating principles.

The equations for the integrals of acceleration and velocity are:

$$\int a\,dt = v$$

$$\int v\,dt = s$$

$$\iint a\,dt\,dt = s$$

where,

s = displacement

v = velocity

a = acceleration

$\int$ = integration symbol

dt = time differential

When acceleration (a) is integrated ($\int$) over a specific period of time (dt), the result is velocity ($\int a\,dt = v$). When velocity (v) is integrated ($\int$) over a specific period of time (dt), the result is velocity displacement (s). Therefore, when acceleration (a) is integrated twice ($\int$) over a specific period of time ($dt^2$), the result is displacement (s).

Remember from elementary physics that acceleration, whose units are $ft/sec^2$, multiplied by time in seconds is velocity in ft/sec. Also, that velocity (ft/sec) multiplied by time (sec) is displacement (ft). The integration of acceleration, for example, is the mathematical process of summing all minute acceleration-time increments over a given period. The result of the integration of acceleration is velocity over the same period. The same integration process performed on velocity gives displacement or distance traveled over the same period.

## Simple Single-Axis Inertial Navigation System

An example of how a simple single-axis INS operates is illustrated as follows: Assume a person is on an INS-equipped train on railroad tracks at the equator. The tracks run in a straight line east and west only.

The INS consists of an acceleration detecting device (accelerometer), an integrating device, and a displacement readout device. The accelerometer can sense movement in only one direction, along its sensitive axis. The sensitive axis is an imaginary line parallel to the movement of the mass within the detecting device. The acceleration detecting device is oriented in the train so that it detects accelerations when the train is moving forward or backward. *Figure 7-25* is a block diagram of such a device.

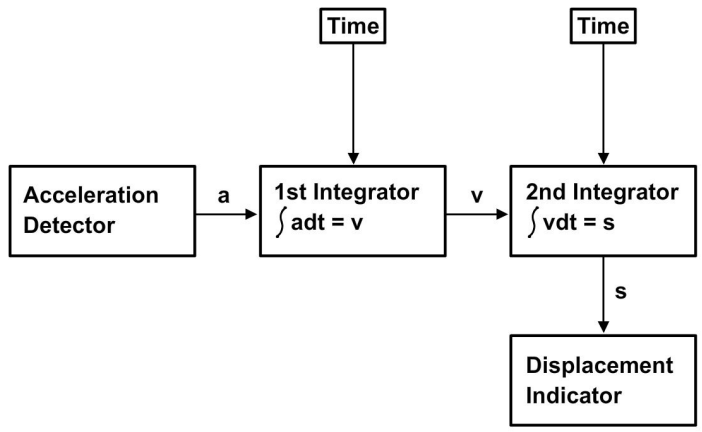


**Figure 7-25 — Simple single-axis INS block diagram.**

If the train starts moving at point A, you will note a specific reading on the displacement readout device. When the train reaches point B and stops, the readout device will show the new position. The distance traveled from point A to point B added to the reference value noted at point A will show on the displacement indicator. The train returns to point A by traveling backwards. Thus, the simple inertial device is not disoriented. At point A the readout device shows the value that was chosen as a reference. This is the displacement at point B minus the distance traveled from point B to point A.

*Figure 7-26, view A,* is a graph of the detected acceleration. *View B* is the velocity curve obtained by integrating the acceleration curve shown in *view A*. *View C* is the displacement curve obtained by integrating the velocity curve shown in *view B*. All three curves are plotted as a function of time.

The acceleration curve *(Figure 7-26, view A)* begins at time $t_0$ as the train begins to travel from point A. Look at *view C*. The acceleration at time $t_0$ has a value of $a_1$, and it remains at that value until $t_1$. At $t_1$ the train ceases to accelerate. Therefore, acceleration goes to zero. At this point, the train reaches a steady velocity. The train continues traveling at a constant velocity until time $t_2$ where the train begins to stop. The acceleration detector detects an acceleration equal in value to $a_1$, but its direction is opposite. This acceleration is constant from time $t_2$ to time $t_3$. At $t_3$ the acceleration goes to zero. The train is now stationary and standing at its destination—point B.

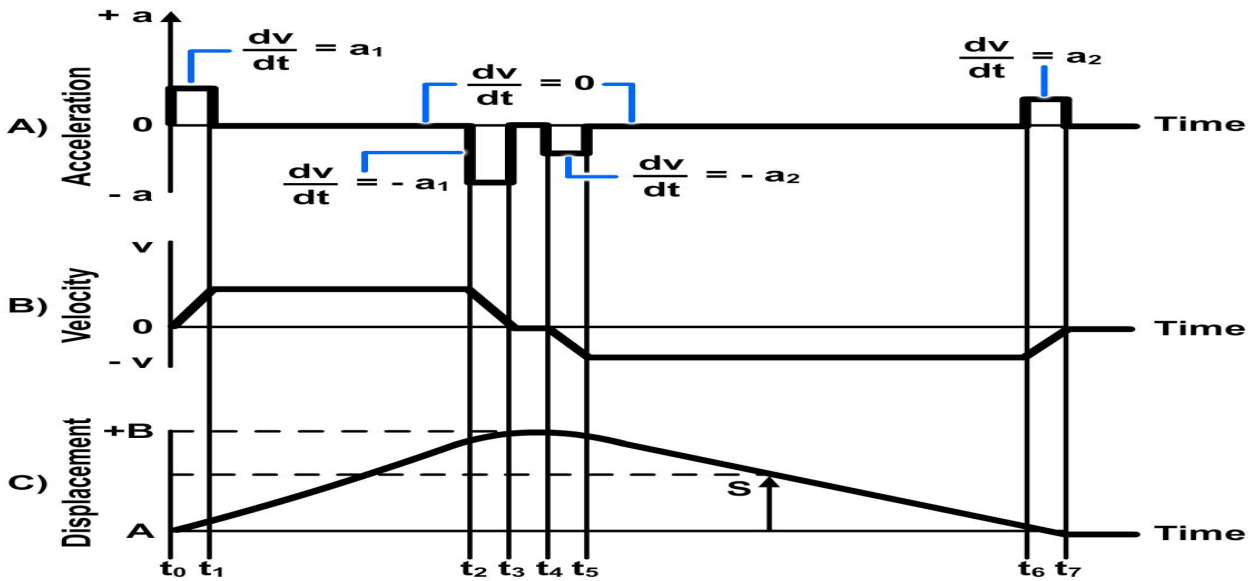


**Figure 7-26 — Integration of acceleration and velocity: (A) acceleration, (B) velocity, (C) displacement.**

Look at the velocity curve for the time interval $t_0$ to $t_3$ *(Figure 7-26, view B)*. It is the result obtained when acceleration is integrated over the same interval. The velocity curve is the output of the first integrator from $t_0$ to $t_3$. During the interval $t_0$ to $t_3$, velocity is changing in an increasing or positive direction. This means that a positive acceleration is taking place. Velocity is constant during interval $t_1$ to $t_2$, which means acceleration is zero. At time $t_2$, velocity begins to decrease. This says that acceleration is again taking place. In this case the acceleration is negative. At time $t_3$, both acceleration and velocity are zero.

The purpose of an INS is to keep track of position and not total distance traveled. To do this it integrates all values of acceleration (positive and negative) detected over the interval. Therefore, it is the net value of acceleration that interests the INS. For instance, in the interval $t_0$ to $t_3$, all accelerations that occur over the interval are summed, giving a net value at time $t_3$. In this case, integration of acceleration *(Figure 7-26, view A)* is the process of summing the area bounded by the acceleration curve and the time axis. The area above the time axis is positive, and the area below the time axis is negative. Since the areas above and below the time axis are equal, the net value for interval to to $t_3$ acceleration is zero. The integral of acceleration for the interval to to $t_3$ is therefore zero. This means that the velocity at time $t_3$ is equal to the velocity at time to, in this case zero.

Integrating velocity from time $t_0$ to $t_3$ is the job of the second integrator. It gives B units of displacement on the displacement axis at time $t_3$. The displacement readout device changes continuously as long as the second integrator produces an output. The second integrator ceases to produce an output when the first integrator (velocity) ceases to produce an output. The velocity integrator continues to produce until receiving an acceleration that balances out the initial acceleration. At this point, it produces a net acceleration of zero. The readout device stops at the point where the net acceleration is zero. Until reaching this condition, the readout device shows a continuous change in displacement.

The return trip is described as follows. The train is at point B during time interval $t_3$ to $t_4$; it begins traveling backwards to point A at time $t_4$. The acceleration detector senses an acceleration $-a_2$, which is negative and slightly less than the previous acceleration, $-a_1$. At time $t_5$ it reaches a steady velocity, and acceleration goes to zero at this point. Note that velocity is now negative since the direction of travel is reversed. Since the size of acceleration $-a_2$ is less than that of $a_1$, maximum velocity on the return trip is less. Therefore, the time required to return to point A is greater. Interval $t_0$ to $t_7$, greater than time interval $t_0$ to $t_3$, reflects this fact. The train begins to stop within a short distance of point A. This happens at time $t_6$, producing an acceleration of $a_2$ as sensed by the acceleration detector. The train comes to a full stop at time $t_7$. Here the detector senses zero acceleration. Since the net acceleration over the interval is again zero, the output of the first integrator (velocity) is zero. The second integrator (displacement) output stops with the displacement readout device showing the reference value. This value is the same originally noted at reference point A.

The simple single-axis INS just described will detect and compute all changes in displacement. However, the acceleration detector (accelerometer) must retain its straight-line orientation. Also, all motion must be along a straight line passing through the reference or initial point. Obviously, using this simple INS, a person must navigate along a straight line.

## Two-Axis Inertial Navigation System

Suppose, for example, that the earth is flat. If so, you can determine position by using a system of coordinate axes. This system of coordinates uses two sets of parallel lines (x and y). One set of lines is perpendicular to the other set of lines. These lines form a grid network over the earth's surface.

If you use two single-axis inertial navigation systems, you can determine position on the plane (flat surface). You simply maintain proper orientation of each accelerometer's sensitive axis relative to the coordinate system. One accelerometer mounts on a platform so that its sensitive axis lies along the x-axis. The other accelerometer mounts on the same platform so its sensitive axis lies along the y-axis. This will maintain their axes mutually perpendicular. The accelerometers will then sense any rate of change of velocity along the coordinate axes. *Figure 7-27* is a block diagram of a simplified two-axis inertial navigation system.

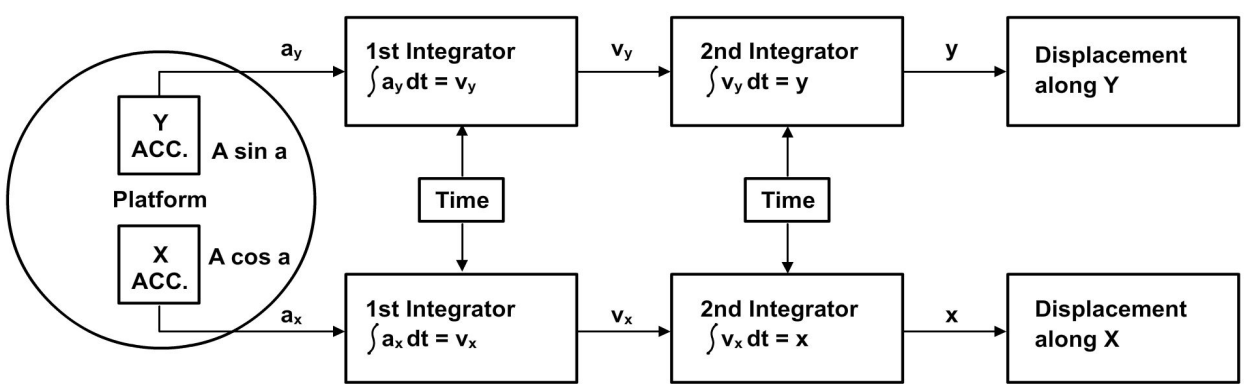


**Figure 7-27 — Two-axis inertial navigation system, block diagram.**

*Figure 7-28* is an illustration of the inertial platform mounted on a vehicle moving over a plane coordinate system. Note that the platform and accelerometers remain oriented with the coordinate axes regardless of vehicle heading. The vehicle's ground track represents the vehicle's displacement over the grid system. You can locate the vehicle at any given time by the x and y coordinates. You plot the x-displacement left to right, and the y-displacement is top to bottom on the page. You reference time to the x-axis.

*Figure 7-29* is an illustration of a typical set of acceleration and velocity curves from the INS shown in *Figure 7-28*.

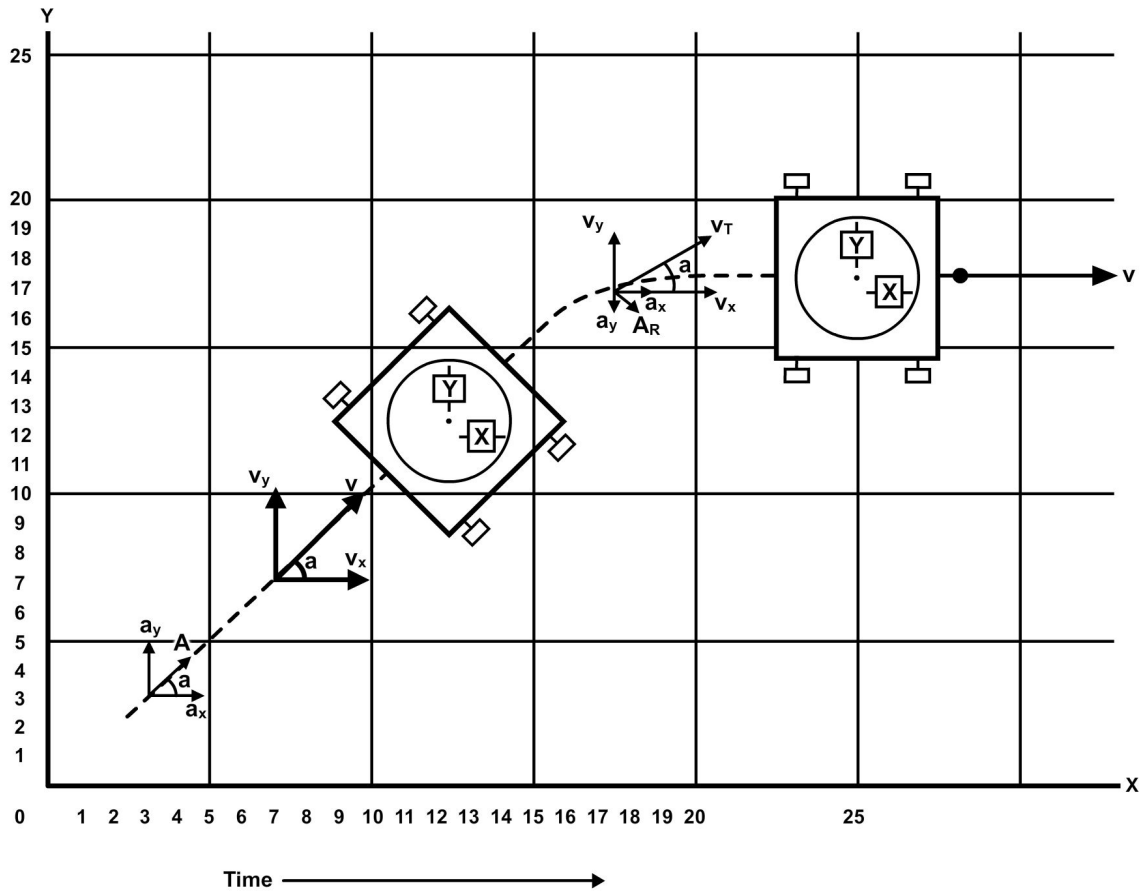


**Figure 7-28 — Two-axis inertial platform in a plane coordinate system.**

Referring to *Figures 7-27 and 7-28*, the operation of the plane inertial navigation system is explained as follows: The vehicle aligns (initializes) on the coordinate system with a displacement of 3 on the x and y-axes. That is, both x and y displacement indicators read 3. At time $t_3$, the vehicle experiences an acceleration, A, in a direction of 45° from the x-axis. The accelerometers detect only that portion of the acceleration that lies along its sensitive axis. This means the x accelerometer detects the component of acceleration along the x-axis. This is A cos a. The y accelerometer detects the component of A along the y-axis, which is A sin a. The vehicle continues in a direction of 45° until time $t_{15}$. At this time it begins a turn to the right. Since sine and cosine are

equal at an angle of $45^0$, the displacements along x and y are equal at time $t_{15}$. This says x = 15 and y = 15. Also, it means the acceleration and velocity along the x-axis is equal to the acceleration and velocity along the y-axis.

At time $t_{15}$, the vehicle begins a right turn; it completes the turn at time $t_{20}$. The new direction is parallel to the x-coordinate and perpendicular to the y-coordinate. By looking at *Figure 7-28*, you see interval $t_{15}$ to $t_{20}$ shows the x-accelerometer detecting a positive acceleration. It also shows the y accelerometer detecting a negative acceleration during this interval. If the vehicle maintains a constant speed throughout the turn, the detected acceleration results from a velocity change. This change is due to a change in direction rather than a change in speed. This acceleration is radial (centripetal) acceleration ($A_R$). The direction of the radial acceleration is toward the center of the turn and perpendicular to tangential velocity ($V_T$). Find coordinates (17.5, 17) in *Figure 7-28*. If the speed hadn't been constant during the turn, a *tangential* acceleration ($A_T$) would have occurred. This acceleration would parallel the tangential velocity ($V_T$) vector and be normal (at a right angle) to the radial acceleration vector ($A_R$). The direction of the tangential acceleration would depend upon whether the speed was increasing or decreasing, positive or negative. If the turning vehicle's acceleration is due to changes in speed and direction, the accelerometers detect the x and y components of the resultant of the two accelerations.

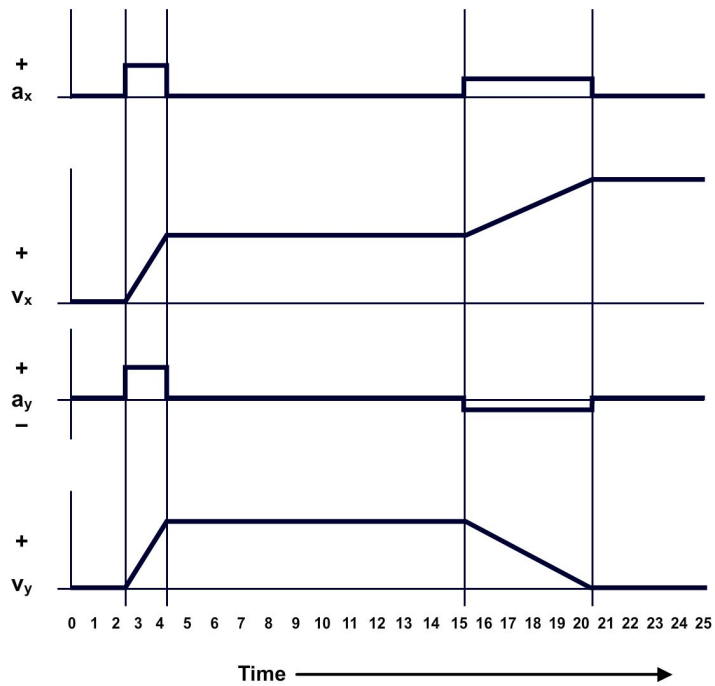


**Figure 7-29 — Acceleration and velocity curves.**

Remember, when detecting acceleration of an accelerating body, accelerometers detect only the component of the resultant acceleration along their sensitive axis. Accelerometers can't tell if the detected velocity change is due to a speed change or a direction change or both, nor does it matter what forces cause the velocity changes. The result is the same, provided the accelerometers maintain correspondence with the coordinate axes.

Refer to the acceleration and velocity curves in *Figure 7-28*. Notice the integration of the x-component of acceleration for the interval $T_{15}$ to $T_{20}$. It shows an increase in the x-component of velocity and, therefore, a corresponding increase in displacement along the x-axis. Integration of the y-component of acceleration over the same interval shows that the velocity goes to zero at time $T_{20}$. Therefore, the displacement along the y-axis ceases to change. Hence at time $T_{15}$, the displacement is (15, 15). At time $T_{20}$, the displacement is (20, 15) and at time $T_{25}$, the displacement is (25, 15), etc.

The INS just described navigates very well on a flat surface. However, navigation on the earth requires a highly complex inertial system. The earth, of course, is not flat, neither is it exactly round. Its radius at the poles is less than its radius at the equator. It also

spins about its polar axis and orbits around the sun. You must take all of these factors into account and correct them (except the earth's motion in orbit around the sun). Once you accomplish these corrections, you may navigate on the earth by inertial means. The earth's motion about the sun does not affect an Earth inertial navigation system. This motion is translational, and it is equal at all points on the earth.

## Basic System Components

The inertial navigation system continuously measures aircraft accelerations to compute aircraft velocity and change in present position. These measurements are made by precision inertial devices mounted on a three-axis stable element, which is part of a four-gimbal structure. The four-gimbal structure allows the stable element to move with 360 degrees of freedom about the three axes.

Two gyros provide gimbal stabilization signals to maintain the stable element level with the earth's surface and aligned to true north. Also, the system uses these signals to measure aircraft pitch-and-roll attitudes. The inertial characteristics of the gyroscopes used in the system define and maintain the reference axes for relatively long periods with great accuracy. With a gyrostabilized platform as a reference, it is possible to accurately detect components of motion in any direction. To do this, precision accelerometers and analog or digital computers are used in an INS.

### Accelerometers

The primary data source for the inertial navigation system is the accelerometer. Three accelerometers are mounted on the stable element between the gyros. They provide output signals proportional to total accelerations experienced along the three axes of the stable element. The system uses these accelerations to produce aircraft velocities and changes in position.

An accelerometer consists of a pendulous mass that is free to rotate about a pivot axis in the instrument. *Figure 7-30* shows one form of this device. It has an electrical pickoff that converts the rotation of the mass about the pivot axis to an output signal. An acceleration of the device to the right causes the pendulum to swing to the left. This provides an electrical pickoff signal, which causes a torquer to restrain the pendulum. The pickoff signal goes to a high gain amplifier. The output of the amplifier connects to the torquer on the accelerometer. During an acceleration, this feedback loop sends a voltage to the torquer. This voltage holds the pickoff signal at a null under the influence of the measured acceleration. This voltage is proportional to the measured acceleration. It also provides the electrical output acceleration signal that goes to the computer.

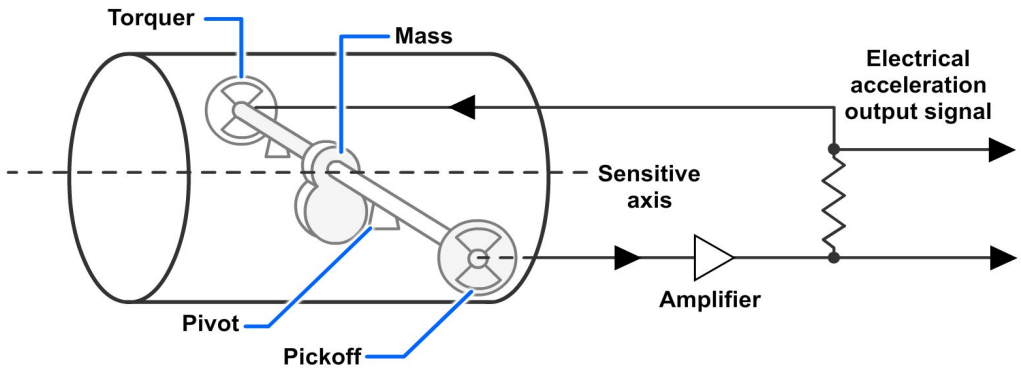


**Figure 7-30 — Typical torque-balanced accelerometer.**

The accelerometer *(Figure 7-31, view A)* cannot distinguish between the acceleration of the vehicle and gravitational acceleration. Therefore, if the accelerometer tilts off level, its output includes a component of gravitational acceleration as well as vehicle acceleration.

Look at *Figure 7-31, view C*. To get the correct vehicle acceleration in the horizontal plane, hold the sensitive axis of the accelerometer normal to the gravitational field. Refer to *Figure 7-31, view B*.

The accelerometer mounts on a platform (stable element) in a way that it is always level. In this position the accelerometer measures true aircraft acceleration in a horizontal direction along its sensitive axis. Mounting another level accelerometer perpendicular to the first one gives you the x and y-axes. The system can now determine total true acceleration in a horizontal plane for any movement in any direction.

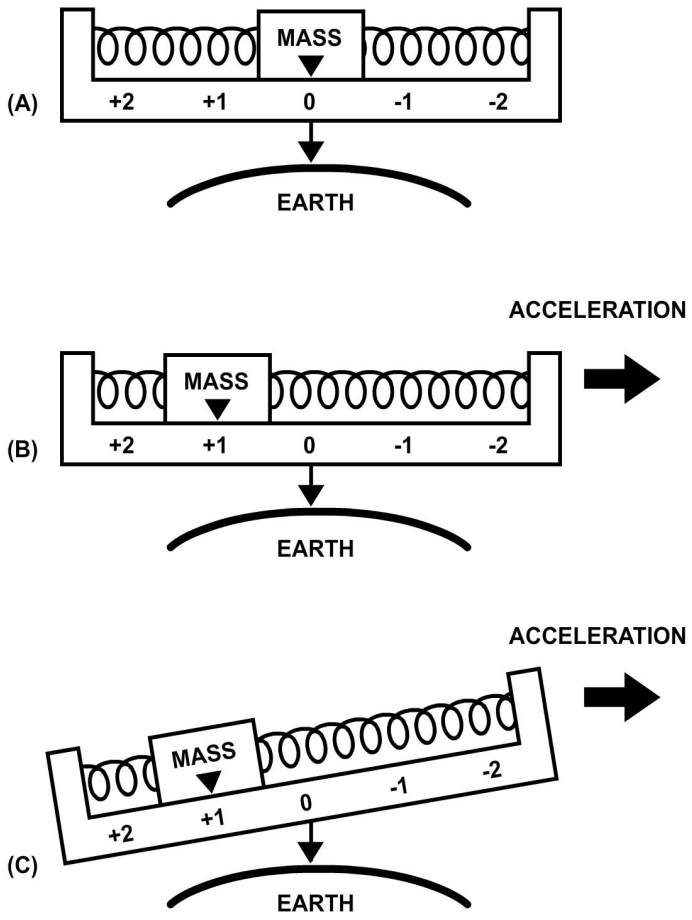


**Figure 7-31 — Principle of an accelerometer: (A) accelerometer at null, (B) true acceleration, (C) spurious acceleration due to gravity.**

### Integrators

To convert the measured acceleration to aircraft position information, the system processes the acceleration signals to produce velocity information. It must then process the velocity information to derive distance traveled. *Figure 7-32* shows an analog type integrator. It is an electromechanical device that receives electrical input (acceleration or velocity) and produces a shaft speed proportional to the input. The shaft angle is the output of the integrator, and it is the mathematical integral of the input. If the input is acceleration, the output is velocity; if the input is velocity, the output is distance.

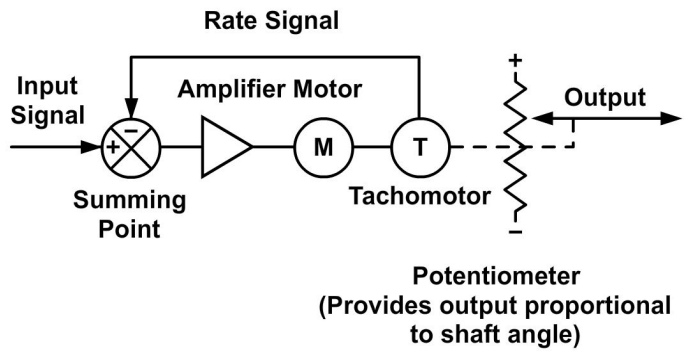


**Figure 7-32 — Analog integrating device.**

If one of the horizontal accelerometers points north, the other one will always point east. By connecting the accelerometer outputs to integrators *(Figure 7-33),* the system can determine distance traveled in the north-south and east-west directions. It is important to maintain the proper accelerometer pointed north and maintain both accelerometers horizontal to the earth's surface.
If the accelerometers tilt off level, it measures gravitational components, which results in navigation errors. A third accelerometer sometimes mounts on the stable element in the vertical plane to determine vertical acceleration.

The computer subtracts the gravity component from the output of the accelerometer. The resulting signal represents actual aircraft vertical acceleration. A vertical acceleration signal goes to an integrator in the attitude computer. This computer computes vertical velocity.

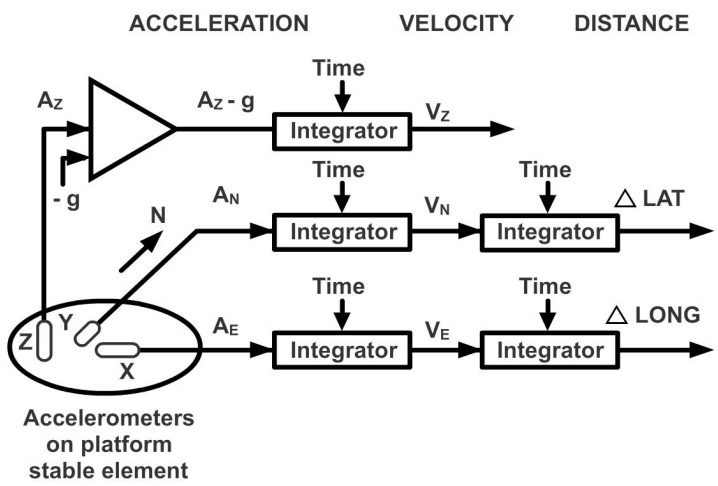


**Figure 7-33 — Basic inertial navigation system.**

### Platform Stable Element

To maintain the proper orientation of the accelerometers, they mount on a stable element together with gyroscopes. The gyroscopes are the sensing elements for controlling the orientation of the stable element. The stable element *(Figure 7-34)* mounts on gimbals, which isolate it from angular motions of the aircraft.

**GYROSCOPES –** The stable element contains two identical, floated, two-degree-of-freedom gyroscopes. They mount one on top of the other in a dumbbell configuration *(Figure 7-34)*. The gyroscopes have their spin axes horizontal and at right angles to each other. The wheels in these gyroscopes, which spin at high speed, resist any effort to change the orientation of their spin axes.

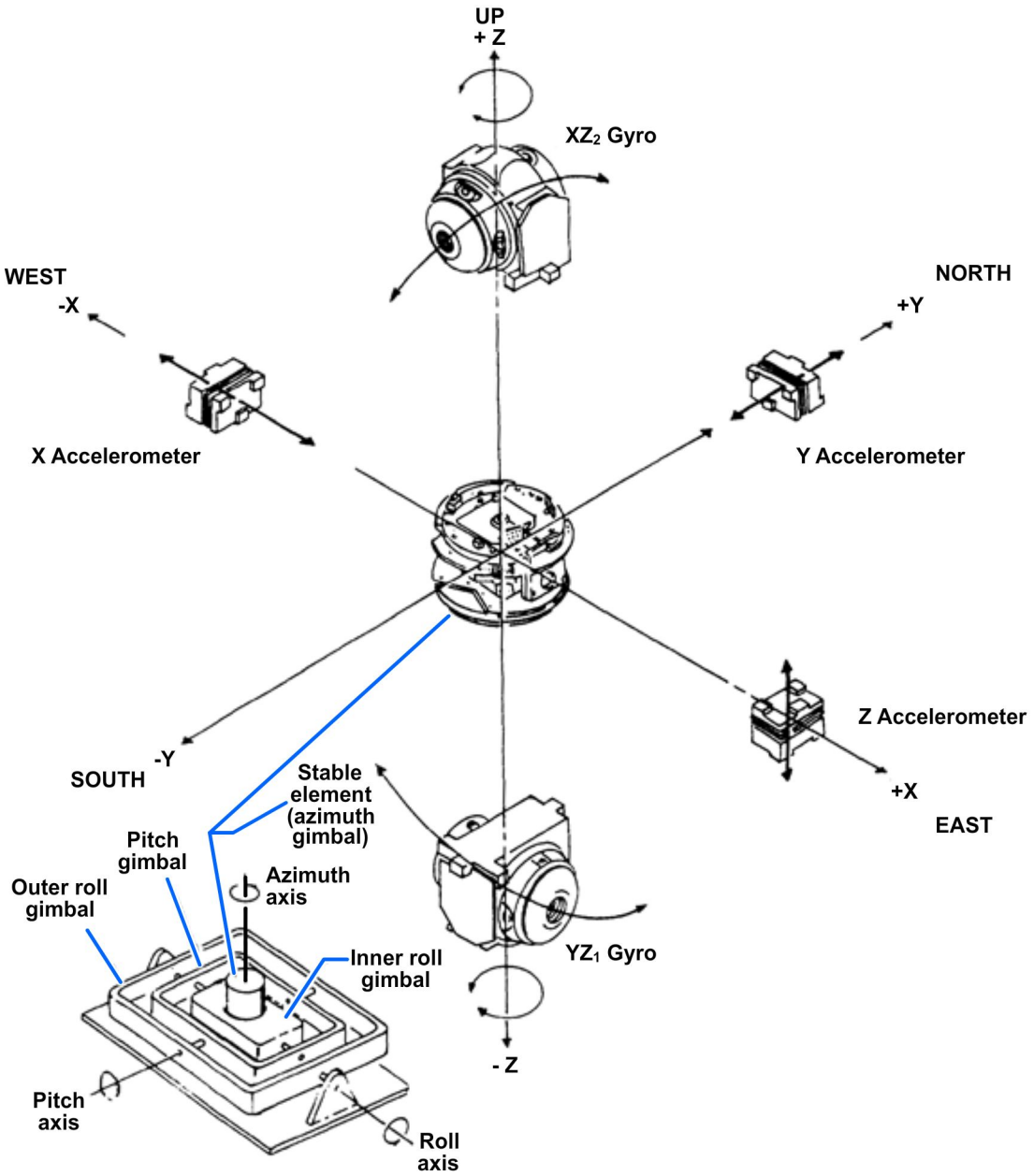


**Figure 7-34 — Simplified platform stable element.**

*Figure 7-35* shows a two-degree-of-freedom gyro and a single-axis stable platform. The pickoffs on the gimbals within the gyro produce electrical signals. These signals occur when the gyro case moves from its null position with respect to the gyro motor. The electrical pickoffs will sense any displacement of the stable element from the frame of reference. The signals thus created drive the platform gimbals to realign the stable element.

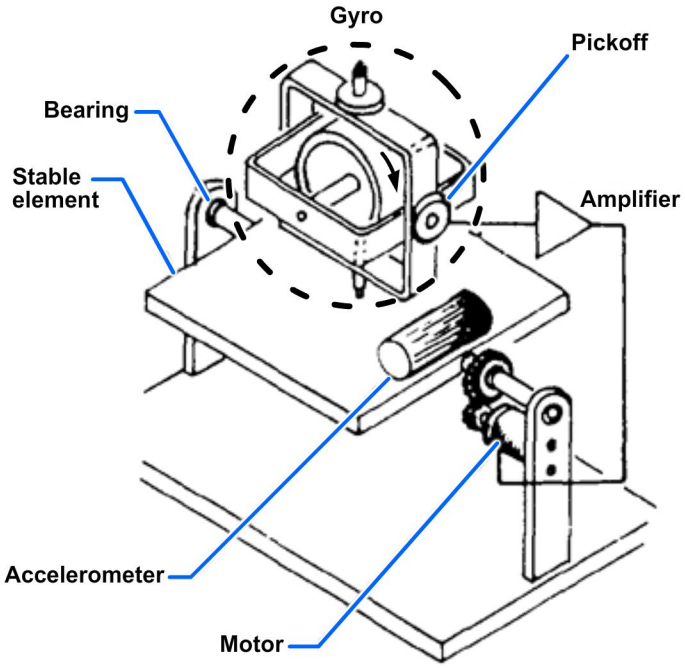


**Figure 7-35 — Single-axis, gyrostablized platform.**

**PLATFORM GIMBAL STRUCTURE –** *Figure 7-34* shows the four-gimbal platform configuration actually used in an inertial navigation system. The stable element mounts in the gimbal structure so that, regardless of aircraft maneuvers, it retains the original orientation. The stable element serves as a level mount for the accelerometers. An azimuth gimbal lets the aircraft change heading without affecting the orientation of the stable element. A pitch gimbal removes the effect of aircraft pitch, and a roll gimbal stops the effects of roll. An extra roll gimbal prevents the occurrence of gimbal lock during certain aircraft maneuvers and makes the system truly all-attitude.

Look at *Figure 7-36*. Note the inner roll gimbal that prevents gimbal lock, which would cause the stable element to tumble. Gimbal lock occurs when two of the gimbal axes become aligned parallel to each other. This causes the stable element to lose one of its degrees of freedom. When the aircraft exceeds 90° in pitch, the outer roll gimbal rotates through 180°. The gimbals are oriented so the system may sense aircraft attitude and heading by measuring angles between the gimbals. Synchros send this information to the attitude indicator and other systems in the aircraft.

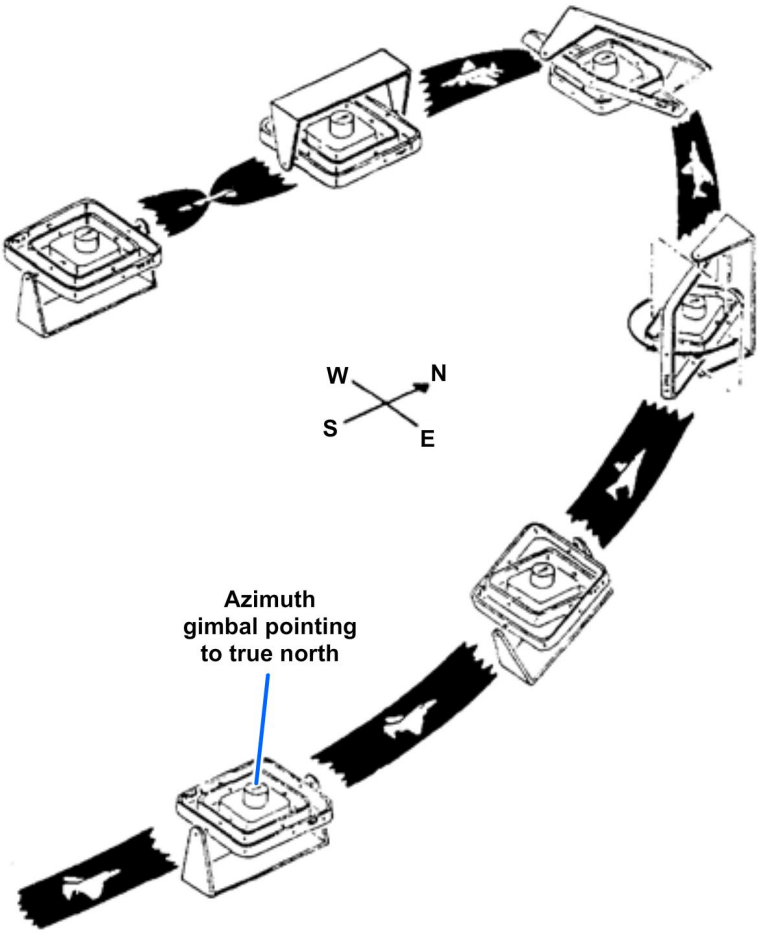


**Figure 7-36 — Gimbal flipping action.**

**PLATFORM ORIENTATION –** *Figure 7-37, view A*, shows the apparent rotation of a stabilized platform located at the equator. As shown, the platform will remain fixed with respect to inertial space. However, it appears to rotate about the surface of the earth as the earth spins about its polar axis. This is undesirable for navigation since the accelerometers will not remain horizontal to the earth's surface. Consequently, this produces gravitational components of acceleration in the outputs of the accelerometers.

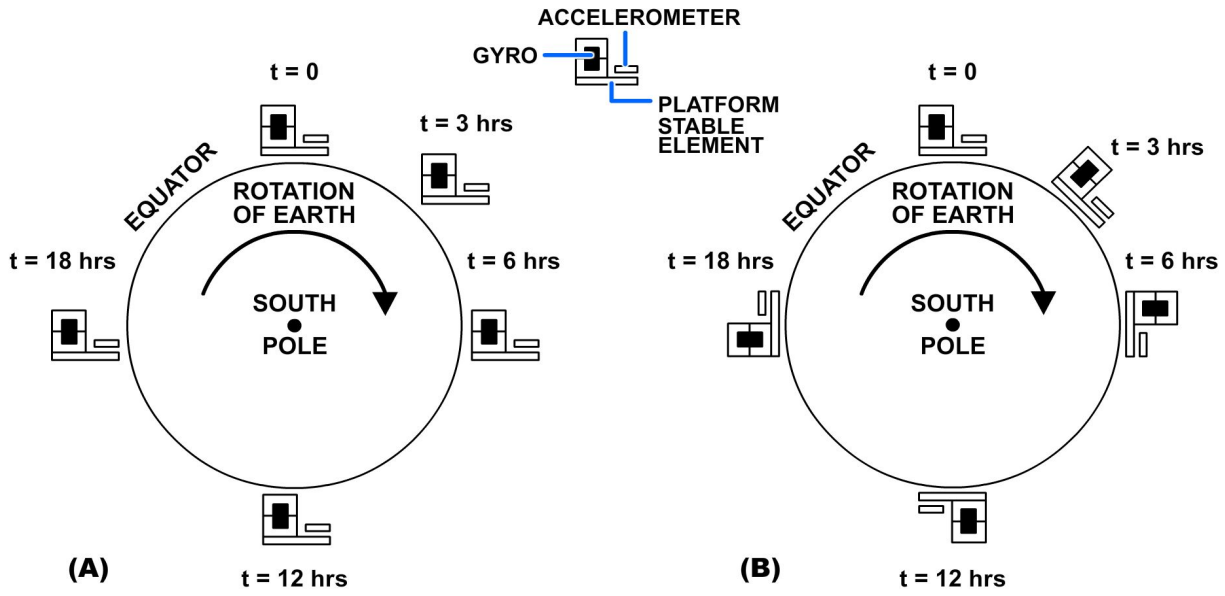


**Figure 7-37 — Earth rate torquing: (A) without gyro torquing; (B) with gyro torquing.**

Consider what happens to a stable element as the aircraft flies over the surface of the earth. As the aircraft flies straight north from the equator to the North Pole, the aircraft sees a continuing pitch maneuver. Look at *Figure 7-38, frames 1 and 2*. At the pole, instead of the platform being level with the surface of the earth, it is now 90° off level.

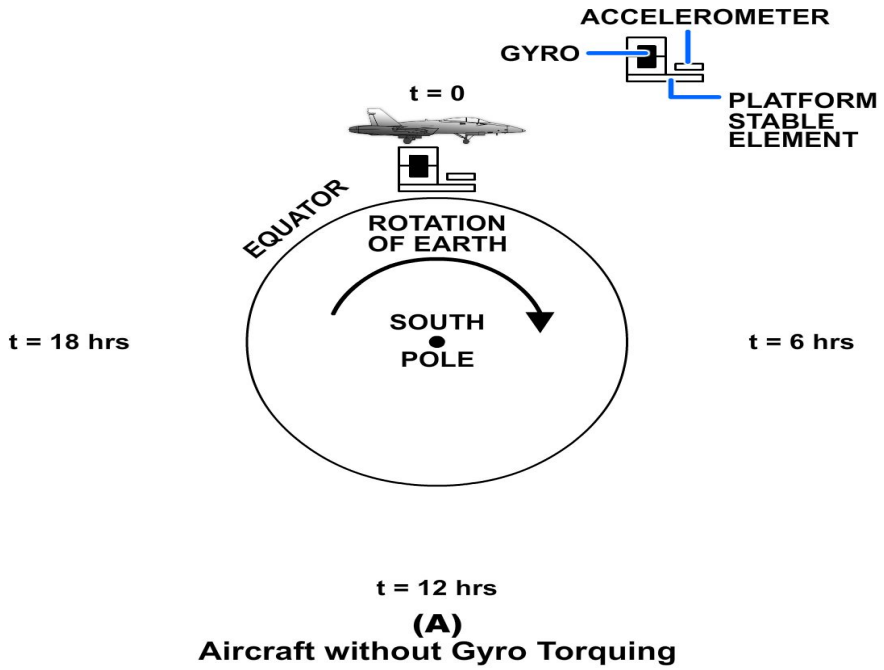


**Figure 7-38 — Aircraft rate torquing: (Frames 1 and 2) without torquing; (Frames 3 and 4) with gyro torquing.**

Interaction Available

**GYRO TORQUING COMPUTATIONS –** To overcome the problems that arise from platform tilt, the system uses the gyroscopic principle of precession. By using this principle as the aircraft flies over the rotating Earth, it is possible to apply a continuous torque to the proper gyro axis. This reorients the gyros to maintain the stable element horizontal to the earth's surface and pointed north. *Figure 7-37, view B,* and *Figure 7-38, frames 3 and 4*, show platform operation with proper Earth-rate and aircraft-rate torquing corrections.

An analog or a digital computer develops the signals necessary to properly torque the gyros. The corrections for Earth rate depend on the aircraft's position on the earth's surface. The analog corrections come from highly accurate potentiometers that produce trigonometric functions of aircraft position. Position integrator shafts drive the potentiometers. To maintain the stable element oriented to the north reference, torquing corrections rotate the platform. The rotation is about the vertical axis compensating for vehicle velocity.

## Schuler Pendulum

A pendulum is any suspended mass that is free to rotate about at least one axis. However, its center of gravity is NOT on the axis of rotation. Therefore, any pivoted mass that is not perfectly balanced is, by definition, a pendulum. The inertial platform is a pendulous device and, therefore, behaves as all pendulums behave. It aligns to the dynamic vertical when at rest. The pivot axis and the center of gravity align with the gravity vector. The center of gravity will be on the bottom. Also, it tends to break into its natural period of oscillation whenever the aircraft accelerates.

Pendulous oscillation is periodic angular motion with the gravity vector as its midpoint. Periodic motion around the local vertical produces obvious errors from an inertial platform. This happens because misalignment about the horizontal plane introduces gravity components on accelerometer inputs. The system will interpret gravity accelerations as horizontal acceleration of the aircraft. The Schuler pendulum is a specially constructed pendulum without the unwanted oscillatory motions of non-Schuler pendulums. It is a special case of both the simple and the compound pendulums, which are discussed in the following paragraphs.

**SIMPLE PENDULUM –** The simple pendulum consists of a small body suspended by a weightless string. The motion of the simple pendulum is both periodic and oscillatory. The period of the simple pendulum is given by the mathematical formula

$$T = 2\pi\sqrt{\frac{L}{g}}$$

where,

T = time of one oscillation in seconds,

L = length of the string, and

g = local gravity.

The formula shows that the period of a simple pendulum is proportional to the square root of the length of the suspending string; the longer the string, the longer the period.

One property of the simple pendulum that is very useful in the construction of an inertial stable element is shown in *Figure 7-39*. Two pendulums are suspended by strings of different lengths. Equal forces horizontally accelerate the suspension point of each

pendulum. The inertia of the bob resists the change in its state of motion. This action causes the bob to lag the point of suspension. It also produces an angular motion of the pendulum about the local gravity vector. *Figure 7-39* shows that the length of pendulum (B) is longer than pendulum (A). It also shows angular motion of pendulum (B) is less than pendulum (A) for a corresponding linear motion of the suspension point. Therefore, the longer the suspending string, the less the angular motion of the pendulum for a given linear motion of the suspension point.

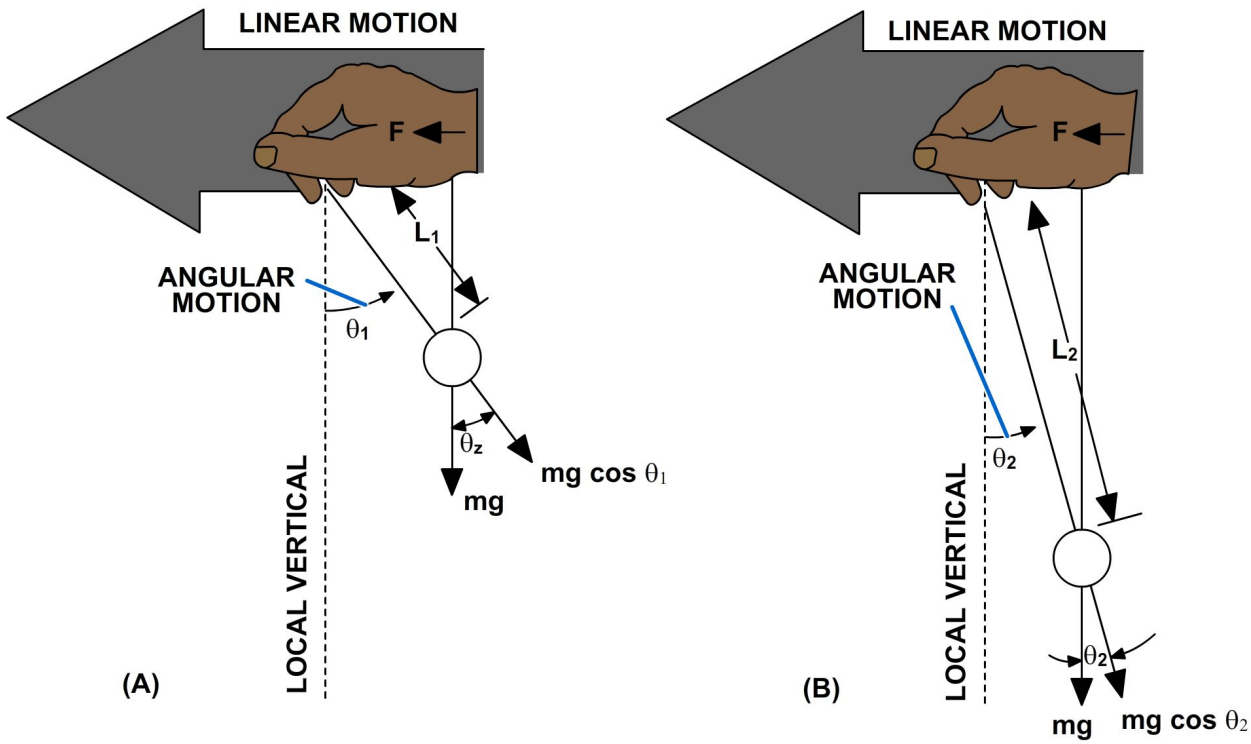


**Figure 7-39 — Simple pendulum.**

Consider what would happen in the following case. The suspending string is long enough to maintain the bob at the center of the earth. The suspension point is transported horizontally along the earth's surface *(Figure 7-39, view B)*. The bob is hypothetically at the center of the earth, the seat of the earth's gravity field. Accelerating the suspension point along the earth's surface merely realigns the suspending string with the new local gravity vector. Therefore, the angular motion of the pendulum about the gravity vector for any horizontal acceleration of the suspension point is zero. This particular pendulum is the Schuler pendulum, shown in *Figure 7-39, view B*. This pendulum gets its name from the German engineer, Maximilian Schuler.

Schuler solved the problem of oscillating shipboard gyrocompasses in the early 1900s. Of course, Schuler couldn't use the simple pendulum itself to solve this oscillating

problem. He used the principle of the simple pendulum to construct a pendulum that reacted like a simple pendulum. The length of this pendulum equals the radius of the earth, which is about 3,440 nautical miles long. The period of oscillation for this pendulum is about 84.4 minutes. Remember, the period of oscillation of a pendulum is proportional to the square root of its length. Therefore, any pendulum constructed to oscillate with a period of 84.4 minutes would have an equivalent length of about 3,440 nautical miles. Such a pendulum is the Schuler pendulum, a special case of the compound or physical pendulum. *Figure 7-40* shows three examples of compound pendulums.

**COMPOUND PENDULUM –** In *Figure 7-40, view A,* the pivot point, P, is farthest away from the center of gravity, represented by distance d. In *view B*, the pivot point is closer to the center of gravity than in *view A*. However, it is farther away than the one shown in view C, which pivots at the center of gravity.

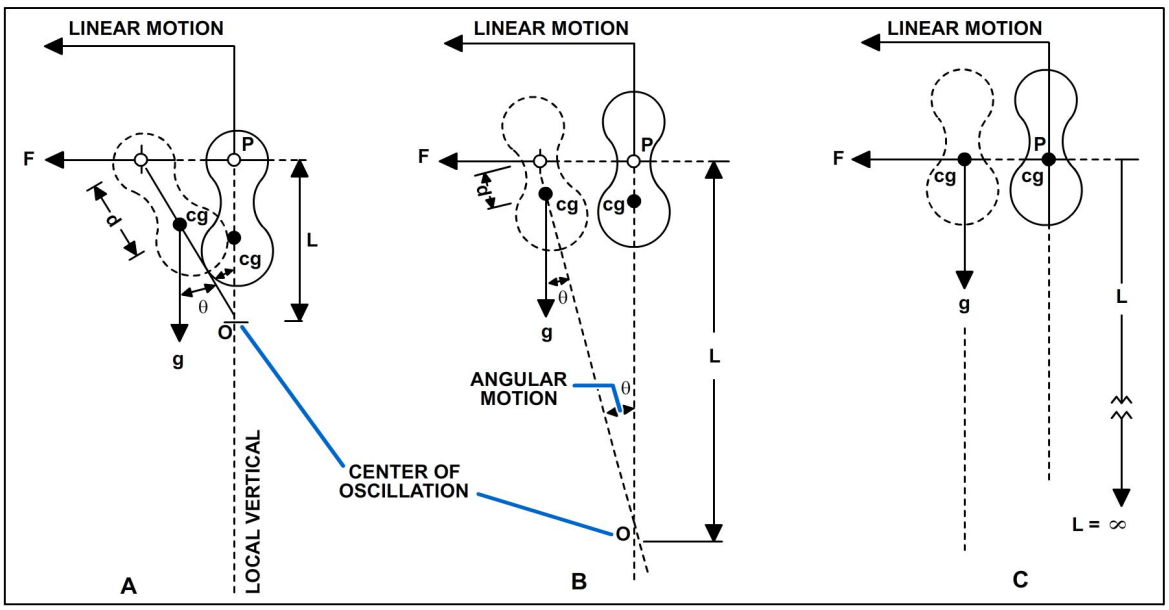


**Figure 7-40 — Compound pendulum.**

The pivot point of each pendulum in *Figure 7-40* is given the same acceleration. Therefore, each pendulum has the same linear motion at its pivot point. Yet, each pendulum has a different angular motion. As distance d decreases, the angular motion of the pendulum about the local vertical (gravity vector) decreases and distance L increases. Distance L is the distance from pivot point P to the center of oscillation, point O. Also, the pivot point and the center of gravity come closer together, and equivalent length L of the pendulum becomes longer. *Figure 7-40, view C,* shows the pendulum pivoted at the center of gravity. In this case there is no angular motion of the pendulum and the equivalent length L is infinite. Therefore, it is not a pendulum; it is a perfectly balanced mass that has an infinite period of oscillation. Thus, it is possible to construct a pendulum of infinite equivalent length and period. It is also possible to construct one that has an equivalent length of 3,440 nautical miles. Such a pendulum would be pivoted at some distance d from the center of gravity. This distance would be greater than the one in *Figure 7-40, view C,* but less than the one in *Figure 7-40, view B*. When

pivoted at a point where the period of oscillation is found to be 84.4 minutes, it becomes a Schuler pendulum.

The stable element is essentially a Schuler pendulum. However, it is not entirely mechanical because the earth's radius varies with latitude. The earth's radius is greater at the equator than it is at the poles. For this reason the stable element uses the process of Schuler tuning. Schuler tuning torques the platform to a position normal to the gravity vector by signals received from a computing loop.

## Frame of Reference

The frame of reference about which the INS defines the instantaneous position of the aircraft is the conventional latitude-longitude coordinate system *(Figure 7-41)*. The local vertical, established and maintained by the inertial navigation system, is the gravity vertical and is coincident with the geographic vertical. The inertial navigation system orients to the true north reference by sensing the motion of the earth rotating on the polar axis. The frame of reference defined is horizontally aligned in a plane parallel to the surface of the earth and oriented to true north.

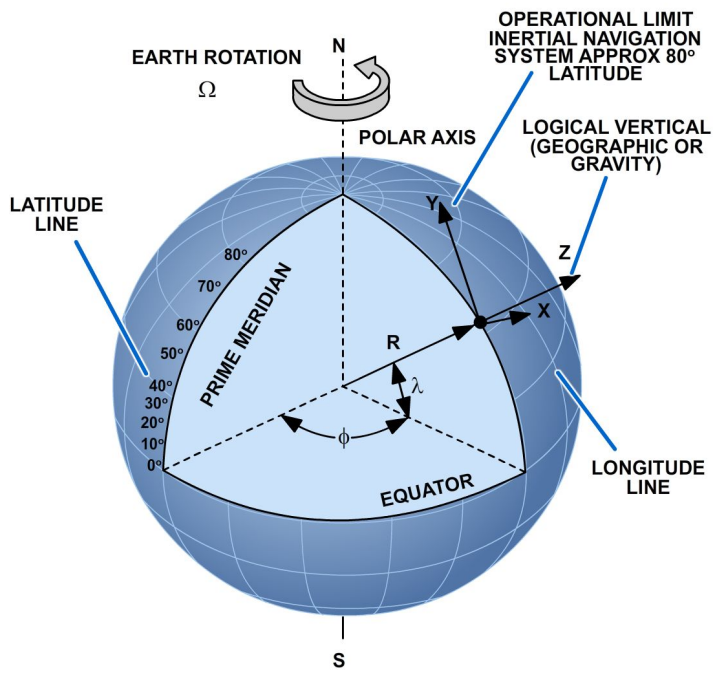


**Figure 7-41 — Frame of reference.**

**ESTABLISHING THE REFERENCE –** Refer to *Figure 7-34* and *Figure 7-41*. By establishing the frame of reference, three perpendicular axes of the stable element will align to the horizontal coordinates of the latitude-longitude navigational system. That is, the stable element z-axis aligns with the local vertical and the y-axis aligns north-south. Therefore, the z-axis is coincident with lines of longitude, and the x-axis aligns east-west coincident with lines of latitude. In all calculations, the x-axis is positive east and the y-axis is positive north. The z-axis is positive away from the center of the earth.

A pair of two-degree-of-freedom gyroscopes establishes and maintains the stable element to the frame of reference. Since a two-degree-of-freedom gyroscope has two sensitive axes, it is necessary to use two such gyroscopes *(Figure 7-34)*. The upper gyroscope z-axis is not in use. They physically mount on the stable element so their spin axes are exactly perpendicular in the horizontal plane. With this arrangement, alignment of the upper gyroscope spin axis north-south will automatically align the lower gyroscope spin axis east-west.

The stable element containing the gyroscopes is supported by the platform gimbal system. Thus, the gyroscopes control the stable element. However, if a free gyroscope

initially orients so the spin axis aligns east-west in a horizontal plane, the gyro will precess. The precession will be about the earth's surface because of the earth's rotation on its polar axis. To maintain an Earth reference, the system must torque the gyro opposite and equal to the apparent precession. The earth's rotation affects the upper ($XZ_2$) and lower ($YZ_1$) gyros. Corrections for Earth rotation go to the Y and $Z_1$ torquing coils ($Z_1$ and $Z_2$ are caged together and both respond accordingly). The system does not use the X torquing coil for Earth rate corrections.

To establish an Earth frame of reference, the gyroscopes are controlled by continuously computed signals. These signals introduce forces (torque) to cause the gyro spin axes to precess in the desired direction. This torque is in the form of direct current signals applied to torquing coils mounted on the gyro float assembly. It creates a magnetic field that aids or opposes the magnetic fields of the permanent magnets mounted on the end bells. This circuit effectively torques the gyro, causing the spin axis to precess to the desired orientation.

The first step in establishing a frame of reference is leveling the stable element. To level the stable element, you align it to the local vertical (gravity vector). This is done by torquing the $XZ_2$ and $YZ_1$ gyros. This moves the stable element until the x and y accelerometers cease to sense any acceleration caused by gravity. This says that the outputs from the accelerometers provide the torquing signals for the gyros. During this time, and while operating, computed Earth rate torquing signals continuously go to the y and z axes torquing coils of the lower gyro. The size of these Earth rate torquing signals is resolved by computing the vertical and horizontal components of Earth rate as a function of latitude.

After establishing the stable element in a rough level position, the x-axis torquing signal drives the stable element in azimuth to null this signal (fine alignment). This signal consists of Earth rate acceleration only, which is a measure of stable element unlevelness. At this time, the X gyro's spin axis is aligned to true north establishing the frame of reference. This alignment condition will remain until you manually sequence the inertial navigation system to the navigate position.

As previously shown, the earth's rotation does not affect the upper X-axis gyro. Therefore, no compensating Earth rate torquing signal goes to this gyro.

**MAINTAINING THE HORIZONTAL REFERENCE –** When the aircraft remains stationary or moves at a constant velocity, the accelerometer outputs are zero. If the aircraft attitude changes while maintaining a constant speed, the accelerometers on an unstabilized platform sense an acceleration due to gravity. Since the accelerometers cannot distinguish gravitational accelerations from horizontal accelerations, the integrators develop a fictitious velocity with a corresponding distance error. It is essential, therefore, that the system maintains the accelerometers in a truly horizontal reference plane. This plane must be independent of aircraft attitude at all times.

This is a basic requirement of the inertial navigation system. The accuracy with which the horizontal reference is maintained determines the overall performance capabilities of the system. A gyrostabilized platform in a gimbal structure serves as an inertial reference. Also, it accurately defines directional reference for the coordinate system.

With the platform installed in the aircraft and aligned along the y-axis, it will remain level regardless of aircraft attitude. The instant the aircraft begins to change pitch attitude *(Figure 7-42)*, the platform gyro senses this angular movement. The gyros then begin to precess at a rate proportional to the pitching rate. A pickoff coil on the gyro axis senses this movement and changes it to a voltage. After amplification, the voltage goes to the pitch gimbal servo drive motor. The motor rotates the stable element exactly equal and

opposite to the aircraft angular motion. As a result, it continuously precesses the gyro to its neutral or level position. This action maintains the gyro output signal at null.

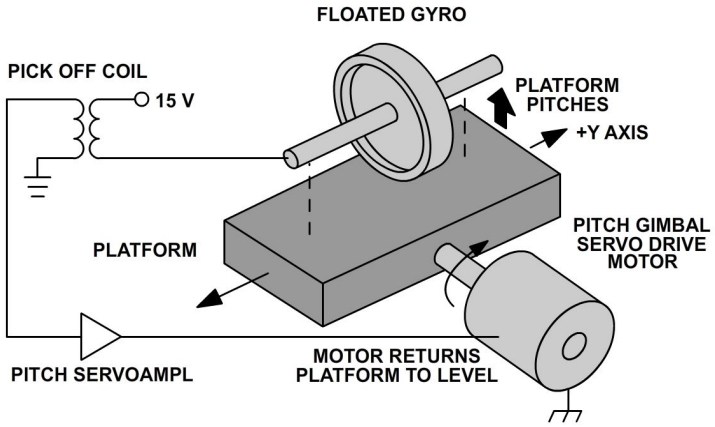


**Figure 7-42 — Gyro maintaining inertial platform level.**

Regardless of any new pitch attitude the aircraft assumes, the gyro will keep the stable element level. This is the only position that allows the gyro's output signal to be at null. In actual practice, the stable element is maintained level. It uses a similar method to maintain its azimuth alignment in yaw and roll. This is necessary so the sensitive axis of the north-south accelerometer aligns true north-south. It is also necessary for the east-west accelerometer to align true east-west. The stable element is then accurately aligned to the three coordinates—north (y-axis), east (x-axis), and up or true vertical (z-axis). This arrangement allows the accelerometers to accurately detect aircraft motion.

**MAINTAINING THE VERTICAL REFERENCE –** The stable element must remain perfectly level or the accelerometers will sense a false acceleration due to the earth's gravity. The gyros try to maintain their inertial position in space and not with respect to the local vertical. This causes the stable element to drift off level as the aircraft moves over the curvature of the earth *(Figure 7-42)*. If this situation were allowed to build up, very large errors in velocity and distance would occur. This condition develops whether or not the aircraft is moving over the earth's surface. The earth's rotation alone will develop the same type of errors.

The stable element must always be perpendicular to the local vertical. Therefore, the system must make the gyros precess in such a manner as to maintain the stable element level. With the stable element level, the sensitive axes of the accelerometers are maintained horizontal to the earth at all times. Now they respond only to the horizontal component of acceleration.

**MAINTAINING THE FRAME OF REFERENCE –** Accuracy in maintaining the stable element to the frame of reference determines the overall performance capabilities of the system. Gyro torquing rate signals are continuously computed to maintain the frame of reference. After alignment, the inertial navigation system is manually sequenced to its operating condition (navigate). If the aircraft were to remain stationary, the gyro torquing rate signals would consist of Earth rate only. However, as the aircraft moves over the curvature of the earth, the stable element Earth reference would be lost. This happens because vehicle movement causes the gyros to precess. Refer to *Figures 7-41* and *7-42.* Therefore, the system continuously computes additional gyro torquing signals to compensate for the vehicle's movement. These signals are aircraft rate torquing signals. They depend on the velocity of the aircraft with respect to the frame of reference; that is,

east-west velocity and north-south velocity. The angular rate is directly proportional to the velocity of the aircraft along the circumference of the earth. The system applies aircraft rate torquing to both gyros so they will precess about all three axes (x, y, and z). Thus, the system continuously maintains the frame of reference.

## Deriving Velocity and Distance

The inertial navigation system can accurately detect aircraft acceleration, and using precision integrators, determine aircraft velocity and measure distance traveled. Accelerations are measured in units of ft/sec² by the accelerometers. However, for analog computation, the accelerations are developed in volts per g of accelerating force. The velocity integrator integrates the accelerating force to obtain velocity. The distance integrator integrates velocity to obtain the distance traveled.

There are two velocity integrators in the system to obtain $V_X$ and $V_Y$ along the two horizontal axes. There are two distance integrators to obtain distance traveled along the two horizontal axes. In addition, some inertial navigation systems employ one other velocity integrator to obtain $V_Z$ along the vertical axis.

## Accelerometer Output Corrections

The arrangement of the accelerometers is perfectly suited to navigation over a stationary plane or over flat terrain moving at uniform speed in a straight line. The earth, however, is a rotating sphere. As far as the inertial platform is concerned, only points along the equator can be considered to possess uniform linear motion. Here, and only here, the accelerometer signals can translate directly into position information. For this reason, it is necessary to provide an automatic device to alter the accelerometer signals. The automatic device allows the system to report meaningful information. The corrective device is purely electrical. All or part of the circuitry is active whenever a velocity signal voltage is present anywhere north or south of the equator. These circuits use the velocity signals, modified according to the latitude of the aircraft position, They insert artificial acceleration signals to those already in the accelerometer output circuits.

The circuits are divided logically—some are for centripetal effect, some for Coriolis. Note, however, that the corrections are complementary.

Although it is convenient to assign a separate purpose to the circuits, as in the following discussions, the functions overlap, and it is not accurate for you to consider them separately.

**CENTRIPETAL CORRECTION –** Centripetal errors are false accelerations sensed when the platform is torqued to maintain its plane of reference. Centripetal correction differs from that of the Coriolis correction in that it has no relationship to Earth dynamics. Even if the earth were stationary, it would still be necessary to insert centripetal correction voltages to the accelerometer signal. Correction voltages ensure an accurate plot of any course that does not coincide with one of the earth's coordinate great circle routes; that is, an exact polar or an exact equatorial orbit. On a great circle route, a route that circles the earth's center, every linear acceleration initiates motion. However, unless the route is due north-south or directly along the equator, the system can't plot the route accurately from raw accelerometer signals.

The orbit resulting from linear acceleration, and the logic of applying centripetal corrections to get an accurate plot of track can be understood if you consider any simple circumstance involving a single acceleration and the inertial reaction. For example, assume a perfect bowling lane surrounds the earth at the equator. Theoretically, a bowler could stand behind the pins and roll the ball in the lane in the opposite direction

(away from the pins). After a few years' time, the bowler gets a perfect strike on the head pin. However, if the lane is on latitude 10°N, the ball would invariably veer south. After a few thousand yards, the ball would fall into the right-hand gutter if rolled east. It would fall into the left-hand gutter if rolled west. In both cases, the ball would roll into the south gutter. (The reason for this phenomenon is clear if you consider a lane built on a latitude in the Arctic only a few yards from the pole. Here, the curve of the lane is obvious.) It is apparent that, if the ball accelerates due east, it will follow, in inertial space, a straight course intersecting the outside gutter. For the ball to roll at a uniform speed and remain in the alley, a uniform north acceleration force must be exerted on the ball in transit. In this case, the north acceleration force is exerted on the ball during transit. Also, remember that north acceleration is a corrective force and does not produce north velocity with respect to the alley.

As shown in *Figure 7-43,* a north-south accelerometer aboard an aircraft circling the pole finds the same phenomenon. In a steep-banked turn, the centrifugal force deflects the north-south accelerometer. It blindly reports a steady north acceleration. The system will show a growing north velocity when, in fact, only an east velocity exists.

**Figure 7-43 — Centripetal correction along latitude.**

Interaction Available

The fault is not in the accelerometers but in the geographic coordinate system's nonlinear pattern to which the platform is slaved. The coincidence of Earth axis and pole implies Earth dynamics in the phenomenon, but actually this is not a factor. Assume we shift the coordinate systems to place the pole at New York. Now use this city as the focal point of one accelerometer axis of an inertial navigator circling the city. The accelerometer sensitive to this axis will report acceleration toward the city.

In a spherical coordinate system, any linear vehicle acceleration initially affecting both accelerometers will result in the vehicle NEVER reaching the pole. The vehicle follows a great circle track that first approaches one of the poles. It will fly due east or west for a brief period, and then depart the pole, as shown in *Figure 7-44.*

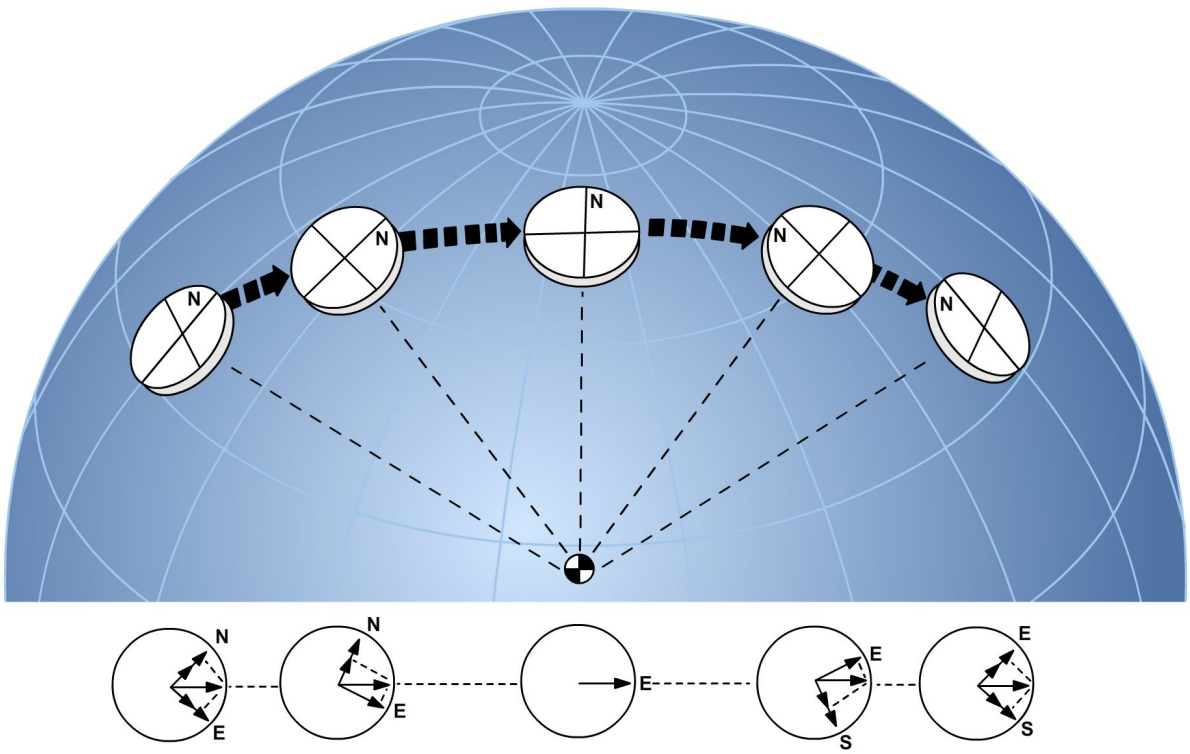


**Figure 7-44 — Platform on great circle route.**

Although the velocity resulting from any given acceleration is initially computed correctly with respect to space, the direction of the speed must be constantly altered. This is necessary if the navigational system is to accurately report a great circle course that crosses both latitude and longitude. On such a course, the aircraft does not turn as it does following a line of latitude. Therefore, it does not generate uniformly false north acceleration signals. The centripetal correction circuit does, however, continue to *plant* signals of acceleration toward the equator. This has the effect of altering the reported speed (the result of velocity along both axes). No actual acceleration has taken place to

cause a speed change. Thus, the centripetal correction circuit must simultaneously plant positive accelerations in one axis if it plants negative accelerations in the other. Therefore, when canceling some of the north or south velocity, the system must add a sufficient increment of east or west acceleration. This allows the reported total speed to remain unchanged, while the reported direction of flight bends toward the equator. As shown in *Figure 7-44,* after a single north-east acceleration has occurred, the north vector becomes progressively shorter. Note that the resultant speed vector is always of the same size.

In summary, you can see that an east or west acceleration in either hemisphere contains a hidden element of acceleration toward the equator. Also, you can say centripetal correction simply acts to reveal this element. When aircraft velocity is not due north or due south, in the Northern Hemisphere the centripetal correction manufactures a south velocity component. In the Southern Hemisphere, it manufactures a north velocity component.

**CORIOLIS CORRECTION –** As mentioned before, the scope of the centripetal correction makes no allowance for Earth dynamics. Since the earth rotates toward the east, all points on the surface have a constant tangential velocity. This velocity is maximum along the equator and lessens at higher latitudes.

Tangential velocity is a linear quantity. It refers to the speed and direction an object would travel in a straight line if freed from the earth's gravity. An object near the equator travels about 1,000 miles per hour in a circular path. Assume the object is free from Earth's gravity and atmosphere. Now it will travel at that speed in a straight line away from the earth (on a tangent to the earth). Its tangential velocity is 1,000 miles per hour. If the object moves toward the North Pole, its speed in circular travel will decrease as it approaches the pole. The speed will be zero when placed exactly over the pole.

Although the earth has a trajectory in space, this motion is not important to the inertial navigation system because every point on the sphere shares this trajectory. The only variable involved is the variation in the earth's tangential velocity at different latitudes. While the accelerometers don't automatically make allowance for this variation, the system must take it into account.

The need for such an allowance is illustrated in the following discussion. Put an aligned INS, devoid of any Coriolis corrective mechanism, aboard a train in the Northern Hemisphere, and transport it north. The earth's tangential velocity at the latitude where the INS aligned is 800 knots east. It is obvious the train's eastward velocity must be constantly reduced as it progresses north. This progressive reduction in velocity represents an acceleration.

Since the tracks constrain the train, a force from the east will be exerted on the wheel flanges. This force is sensed by the east-west accelerometer as acceleration to the west. The system begins computing west velocity that will grow. Refer to *Figure 7-45.* An aircraft flying north directly along a moving longitude meridian subjects the east-west accelerometer to this same force. This happens as its course in space alters to the left, compensating for the decreasing eastward velocity of the earth's surface.

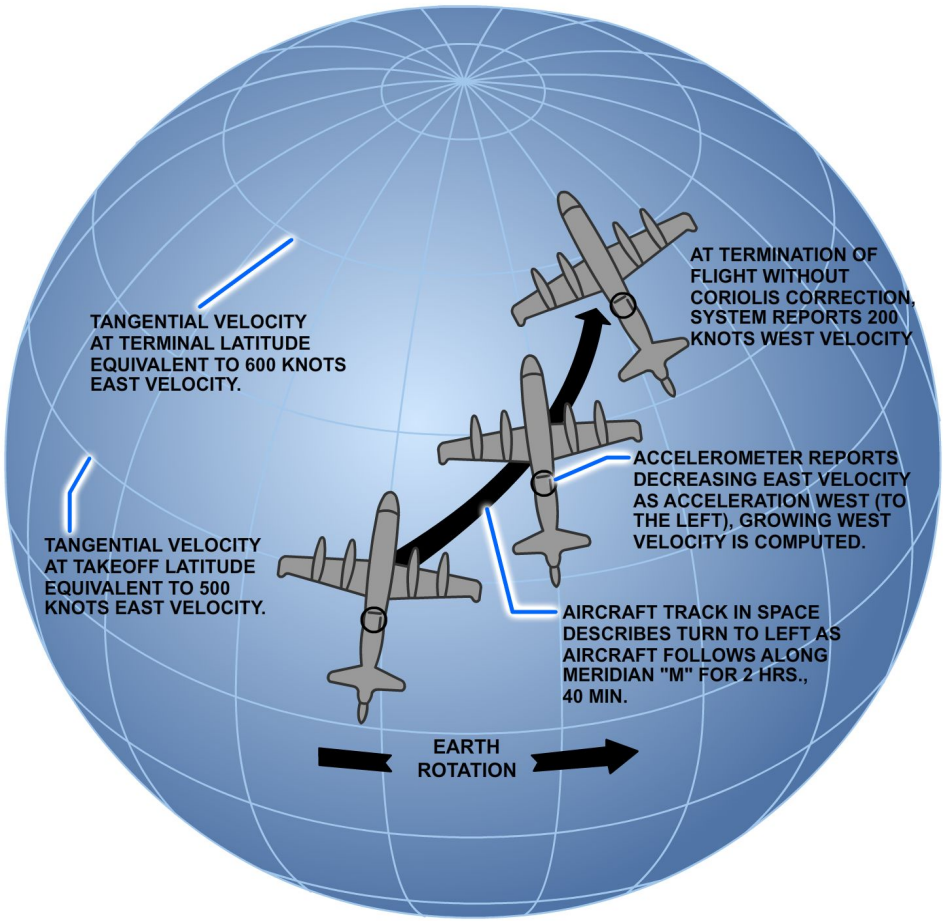


**Figure 7-45 — Coriolis effects.**

The train traveling north stops at a latitude where the earth's tangential velocity is 600 knots. This is 200 knots less than the tangential velocity at the point of its initial alignment. The velocity computer will continue to report that the vehicle is traveling west at 200 knots even though it is perfectly static. The Coriolis correction prevents this from happening. It creates enough east acceleration signal to offset the continual west acceleration generated by the east-west accelerometer as it travels north. The east and west accelerations cancel, thus, there is no change in longitude to report. Of course, on the return trip, the platform is under the delusion that 600 knots east is zero velocity. So as it travels south, the increasing Earth tangential velocity causes it to constantly report east acceleration. In this case, the Coriolis correction also reverses. It now manufactures a west acceleration that exactly voids the east acceleration.

In both of the above cases, the Coriolis correction supplies an artificial signal of acceleration to the right side of the actual track. This is the nature of the Coriolis correction, regardless of the direction of travel in the Northern Hemisphere. Look at *Figure 7-46.* When the track is east along a latitude line, centripetal correction offsets the increment of north acceleration generated by aircraft speed. The Coriolis correction accounts for the additional force generated by the earth's rotation. For example, if the earth's tangential velocity at latitude L is 700 knots and aircraft speed 350 knots, total speed is 1,050 knots. Centripetal correction offsets the acceleration caused by the

centrifugal force of a 350-knot turn of this radius. Coriolis correction offsets the force of a 700-knot turn. In this case, the two corrections are summed.

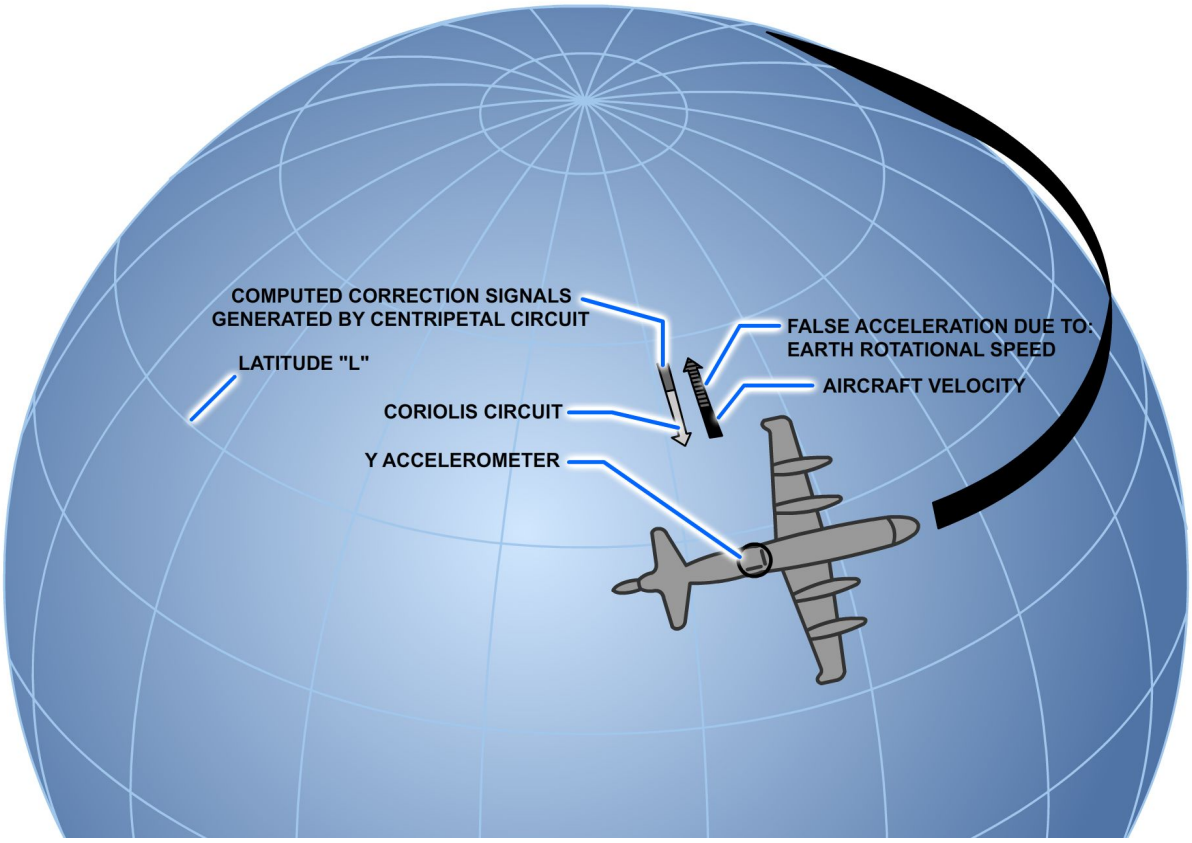


**Figure 7-46 — Coriolis and centripetal corrections.**

If the course is reversed and the plane flies west, the correct ions become opposite in polarity. The centripetal signal is still south, but Coriolis is north (to the right of the track). Therefore, only a part of the larger correction is effective.

## Schuler-Tuned Loop

The Schuler-tuned loop is a closed loop circuit between the accelerometer, velocity integrator, and stable element. It prevents large velocity and distance errors caused by misalignment of the stable element. *Figure 7-47* shows a simplified Schuler-tuned loop with the platform aligned.

The output of the accelerometer is integrated to provide a velocity signal. The velocity signal is multiplied by 1/R where R equals the earth's radius. This operation derives an angular velocity about the earth's surface, V/R. The system uses this angular velocity to torque an integrating gyro. The torque causes the platform to precess about the earth's surface. This precession equals the rate the platform is being transported over the surface. This maintains the platform normal to the local vertical.

There are two such loops in an inertial navigation system, one for the north and the other for the east. The accelerometer in the north loop senses north-south accelerations, yet the gyro in the north loop senses east-west angular rates. That is, the vehicle's angular movements about the east-west axis.

By convention, we name accelerometers and gyros according to the direction of their sensitive or input axis. The inertial or Schuler loop takes the name of its accelerometer. The north loop contains the north accelerometer and the east gyro. The east loop contains the east accelerometer and the north gyro.

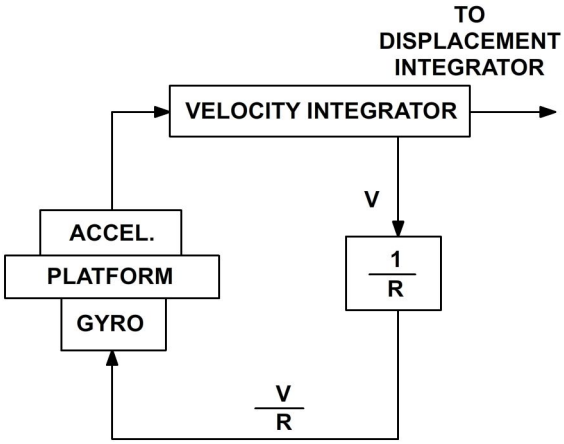


**Figure 7-47 — Simplified Schuler-tuned loop, platform level.**

With the platform initially unlevel, as shown in *Figure 7-48,* the accelerometer senses a component of gravity, g sin θ. This signal is integrated, resulting in the velocity signal Vθ. The velocity signal then causes the gyro to precess in a clockwise direction. When the accelerometer is positioned to sense zero gravity, the velocity output continues to torque the platform in a clockwise direction. This causes the accelerometer to now sense a gravity component of the opposite polarity. This signal causes the velocity signal to decrease to zero. The velocity signal now builds up in the opposite direction and precesses the platform in a counterclockwise direction. The oscillation set up by this mechanization has a period of 84 minutes, equal to that of the Schuler pendulum.

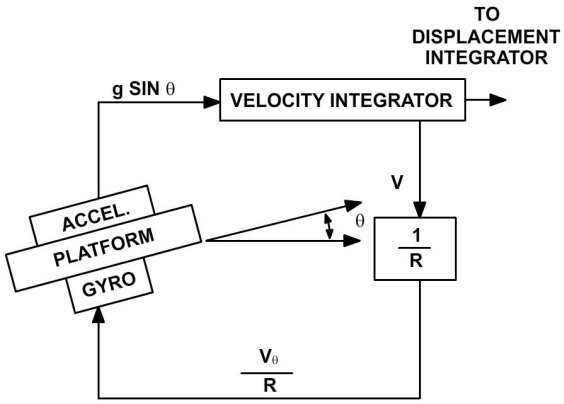


**Figure 7-48 — Simplified Schuler-tuned loop, platform unlevel.**

*Figure 7-49* shows the buildup and decay of acceleration and velocity errors as a result of such errors as just described.

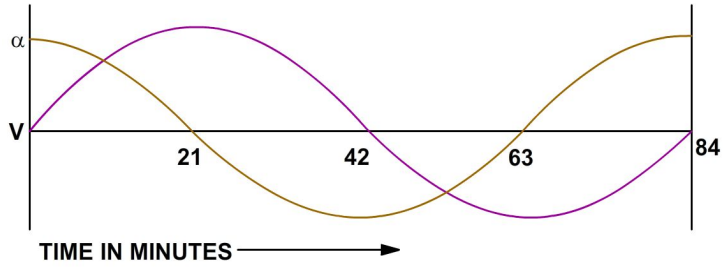


**Figure 7-49 — Schuler tuning – acceleration errors versus velocity errors.**

## ALIGNMENT

Inertial navigation depends on the integration of acceleration to obtain velocity and position. In any integration process, the system must first know the initial conditions. In this case the initial conditions are velocity and position. The accuracy in solving the navigation problem depends greatly upon the accuracy of the initial conditions. Therefore, system alignment is of paramount importance.

System alignment consists of creating a coincidence between the platform axes and the computer axes. This can be done by rotating either or both systems. There are two general methods of accomplishing this condition.

1. The system is slaved to an external reference source.
2. The system may have the built-in capability to sense misalignment and correct itself.

External references take three basic forms—terrestrial, celestial, and inertial. The terrestrial system uses surveyed lines, bench marks, plumb bobs, and bubble levels. These methods result in level accuracies of about 10 seconds of arc and heading accuracies to 3 minutes of arc. Celestial information from star trackers and radio sextants has accuracies to 10 seconds of arc. When using an inertial system as a source, the accuracies depend on its initial source and length of time since last aligned. Such a method is usually for mobile alignment where primary sources cannot be used.

The use of an external reference system requires transfer devices to transmit the reference information to the system. The transfer devices are either optical or electromechanical devices. Optical devices include theodolites and autocollimators; the electromechanical devices are synchro-resolver or digital type. Optical methods can produce accuracies of a few seconds of arc. The electromechanical methods are accurate to about 30 seconds of arc.

In self-alignment, the inertial sensing instruments mounted on the platform sense the deviation from the desired position. To determine the orientation of a three-axis orthogonal (perpendicular) coordinate system, you must have at least two noncollinear (not parallel) reference vectors. For self-alignment, the earth's spin vector and the mass attraction gravity vector serve this purpose. The self-alignment puts fewer requirements on the computer. In self-alignment, the accelerometer outputs don't have to be resolved into components of gravity and vehicle acceleration. When accelerometers and gyros mount on the same element, their relative position is fixed and does not have to be computed. Self-alignment often divides into two modes—rough or course alignment (sometimes called caging) and fine alignment. Fine alignment itself divides into two modes—leveling and gyrocompassing.

## Rough Alignment

Rough alignment provides a convenient starting point for the later phases of alignment. In most cases, the gimbals slave to their own synchro outputs or to some external source. This external source will have a particular orientation with respect to the vehicle. A timing network controls the duration of rough alignment, which is usually a short period.

## Fine Alignment (Leveling)

To accomplish fine alignment or leveling, the system rotates the platform axes to the computer axes. For a locally level system, this is done by placing the x and y accelerometer axes mutually perpendicular to the gravity vector. Since accelerometers mount at right angles, a motion about one axis causes the other to go through an angle with respect to the gravity vector. Therefore, you connect the accelerometer output in a way to allow it to torque about its perpendicular axis. The accelerometer can now slew itself to a null position, where it senses no component of gravity. As pointed out earlier, the device the system can torque about an axis is a gyro. In this case, the gyro being torqued is the one sensitive about the axis perpendicular to the accelerometer being leveled; that is, the y gyro (north) torques the x accelerometer (east) to level, etc.

The accelerometer will provide a dc voltage that is proportional to the sine of the off-level angle. In the leveling mode, after amplification this voltage goes to the gyro, whose sensitive axis is perpendicular to the sensitive axis of the accelerometer. See *Figure 7-50.* In other words, the output of the x accelerometer goes to the y gyro. The output of the y accelerometer goes to the x gyro.

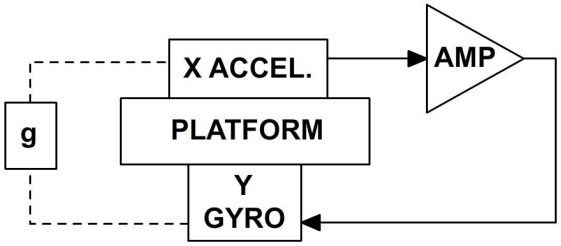


**Figure 7-50 — Typical leveling loop.**

## Gyrocompassing

As mentioned, any gyro not having its spin axis parallel to the earth's spin axis will apparently precess about the earth. The rate at which it precesses is proportional to the angle between its spin axis and the earth's spin axis. This angle can be resolved into two components. Since the gyro spin axis lies in the level plane already established, one component can be found in the plane itself. Now, find the angle between the spin axis and a vector in the level plane that intersects the earth's spin vector. Once you find these two angles, you know the exact position of the platform axis.

You can see the rate at which the gyro in question appears to precess is equal to $\Omega \cos \lambda \sin a$ where

$\Omega$ = the earth's rate of rotation

$\lambda$ = latitude

$\alpha$ = the angle the platform makes with true north

The spin axis of this gyro can be torqued to a place where this term goes to zero ($\alpha = 0$). Also the computer can develop a torquing term equal to this and apply it to the gyro. In either case, the position of the platform is known. *Figure 7-51* shows a typical heading alignment loop.

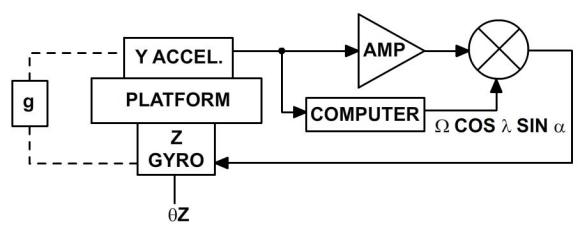


**Figure 7-51 — Typical heading alignment loop.**

In a north-seeking platform, the system uses the earth's rotation to align the platform to true north. It accomplishes this by using the output of the y accelerometer. The system applies this output to the torquing coils of the z (azimuth) and the x (east) gyros. At the beginning of the gyrocompass phase (after the platform is leveled), the stable element is torqued in azimuth. This nulls out the residual east gyro torquing rate. If the stable element is not aligned to true north now, it begins to tilt due to precession of the gyros. The y accelerometer senses deviation of the stable element from level because of gravity. The output of the accelerometer then torques the x gyro until the stable element is level. At the same time, the output signal also torques the z gyro in azimuth. The process continues until the stable element aligns to true north.

Once the platform is aligned, the operator switches the system from the alignment phase to the navigation phase of operation. In the navigation phase, the stable element would maintain an orientation about free space if not for corrections supplied by the computer. The computer maintains the stable element level with respect to the earth and oriented to true north. If not, the accelerometers sense gravity in addition to movement of the aircraft. Coriolis, centripetal, and Earth rate corrections are computed and used to hold the stable element level and aligned to true north. In the navigation phase of operation, the orientation to true north is dependent on the original aligned position and the computed corrections.

To this point, a north-pointing inertial system has been discussed. A disadvantage of the north-pointing system is that it cannot operate in the Polar Regions; it must always be physically pointed north. If the system flies directly over the pole, it must rotate 180° to again be pointing north. This rotation would not be physically possible because of the extremely high torquing rates necessary. Most north-pointing inertial systems cannot operate within several hundred miles of the poles due to stress on the system components.

## Wander Azimuth

The wander-azimuth inertial system solves the problems of operating an inertial system at the poles. The fundamentals of a wander-azimuth system are the same as a north-pointing system. During the gyrocompassing mode, the system allows the platform to take an arbitrary angle (wander angle) with respect to true north.

As previously mentioned, the platform is leveled; but, the accelerometer outputs are now supplying torquing signals to both gyros. This action compensates for the earth's rotation (this signal was sent to x gyro only in the north-pointing system). Eventually, the correct Earth rate torquing signals maintain the platform level. The computer then uses the ratio of Earth rate compensation to compute the wander angle *(Figure 7-52)*.

As the wander-azimuth system navigates around the earth, the wander angle (with respect to true north) changes as a function of longitude. The system operation is the same as a northpointing system. However, the wander angle is taken into account by the computer with the north and east sensored accelerations.

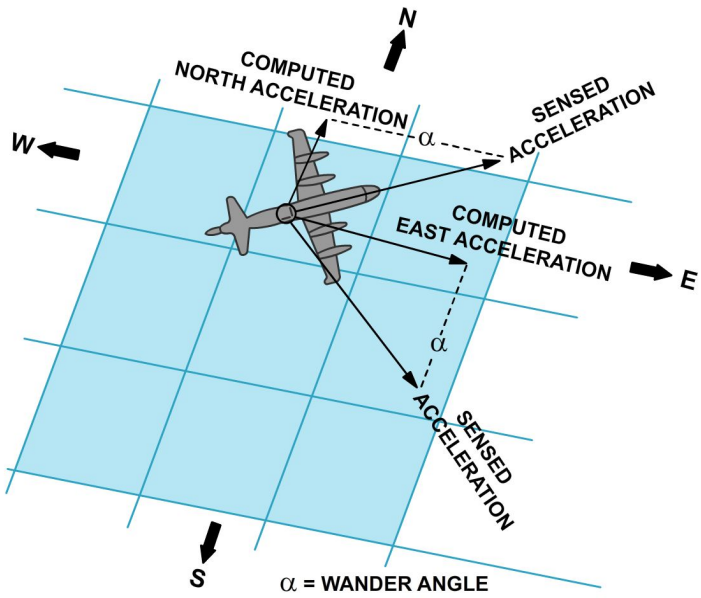


**Figure 7-52 — Wander angle.**

## Alignment at Sea

Problems that arise in aligning an aircraft INS on aircraft carriers at sea are more complex than aligning the INS ashore. This situation exists even though our carrier-based inertial reference is another INS of very high accuracy. The inertial navigation reference system aboard an aircraft carrier is the Ship's Inertial Navigation System (SINS) and the Relative Velocity Computer (RVC). Outlets on the flight deck make it convenient to pipe the SINS reference information into the aircraft inertial navigation system. However, one major problem still remains that makes proper alignment difficult: the accelerations experienced by the ship's inertial navigation accelerometers located below deck. These accelerometers are remote from the aircraft accelerometers, and therefore do not sense the same accelerations.

**COARSE SEA ALIGNMENT –** During coarse sea alignment, the best available true heading is from the SINS and the RVC. Aircraft carrier true heading goes to the RVC. Here a manually-selected aircraft heading angle, with respect to the aircraft carrier, is inserted. The combined signals then go to the heading computer in the aircraft's inertial navigation system, thus concluding the coarse sea alignment.

**FINE SEA ALIGNMENT –** During fine sea alignment, the accelerometers sense the aircraft carrier movement in addition to gravity. Only the gravity component is used in the leveling. This allows accelerometer output caused by aircraft carrier movement to be canceled. The SINS and RVC accomplish this task by supplying continuously computed corrections. The accelerometer error signals are integrated to supply a velocity. The reference velocity supplied by the RVC during sea alignment, actual aircraft velocity, is subtracted from the accelerometer derived velocity. The difference corresponds to the gravity component sensed by the accelerometer. After amplification it is applied to the torquing coils of the gyros. The processing of the gyro pickoff signals cause the gimbals to rotate and cancel the pickoff error signals. The stable element is torqued until the accelerometers show a null or level condition.

# TYPES OF INERTIAL NAVIGATION SYSTEMS

You can classify inertial navigation systems under two broad types—pure and hybrid. The types of pure INS are analytic, semianalytic, geometric, and strapdown. The types of hybrid INS are radio inertial, Doppler inertial, and stellar inertial.

## Pure Inertial Navigation Systems

As the name implies, a pure INS is not combined with other equipment to improve its operating performance.

### Analytic Inertial Navigation System

The analytic INS uses a platform with a fixed angular reference to some point in inertial space. The system makes no attempt to force the accelerometer input axes into a preferred alignment with respect to the earth. This method does not require gyro torquing. As a result, this platform is subjected to errors of gyro drift only.

Because the platform remains rigid in space and rotates about the earth, the output accelerations become complex. They essentially consist of two major accelerations—the actual acceleration of the vehicle and the gravitational acceleration of the earth. For navigation purposes only aircraft accelerations are required and wanted; therefore, the gravitational accelerations must be canceled. Yet this cancellation is difficult to obtain because the earth's gravitational acceleration is not uniform. Therefore, the computer must store an enormous amount of data to effect this cancellation.

The significant disadvantage of analytic inertial navigation is the result of maintaining the accelerometer referenced to a fixed point in inertial space. As the stable element navigates about the earth, the accelerometers must sense aircraft acceleration and the earth's gravitational field component. The accelerometers for this system must have a wide dynamic range as well as a high overall accuracy. The most serious problem, however, is the cancellation of the gravitational accelerations. Irregularities in the earth's shape and mass cause variations in the gravitational field. Therefore, the cancellation of these variations requires a complex computer with a very large storage capacity.

### Semianalytic Inertial Navigation System

The semianalytic system is the INS most commonly in use today. All naval aircraft that use INS have this type of system. It may either be a pure system or work with another navigation system as a hybrid system. This system's chief advantages are the simple platform gimbal structure and computer functions that are easily attained by either analog or digital means. The semianalytic system always maintains the stable element normal to the earth's gravitational vector just as in other systems already discussed in this chapter. In this system, the computer converts the output accelerations of the stable element to angular velocities. These angular velocity signals then torque the platform gyros to maintain the platform normal to the earth's gravity vector.

The computer also develops signals to prevent the platform from processing off level due to the earth's rotation about its polar axis. These signals are equal to the angular velocity of the earth resolved into the system axes. The system then applies these signals to the gyro torquers. A typical simplified block diagram of a semianalytic INS is shown in *Figure 7-53.*

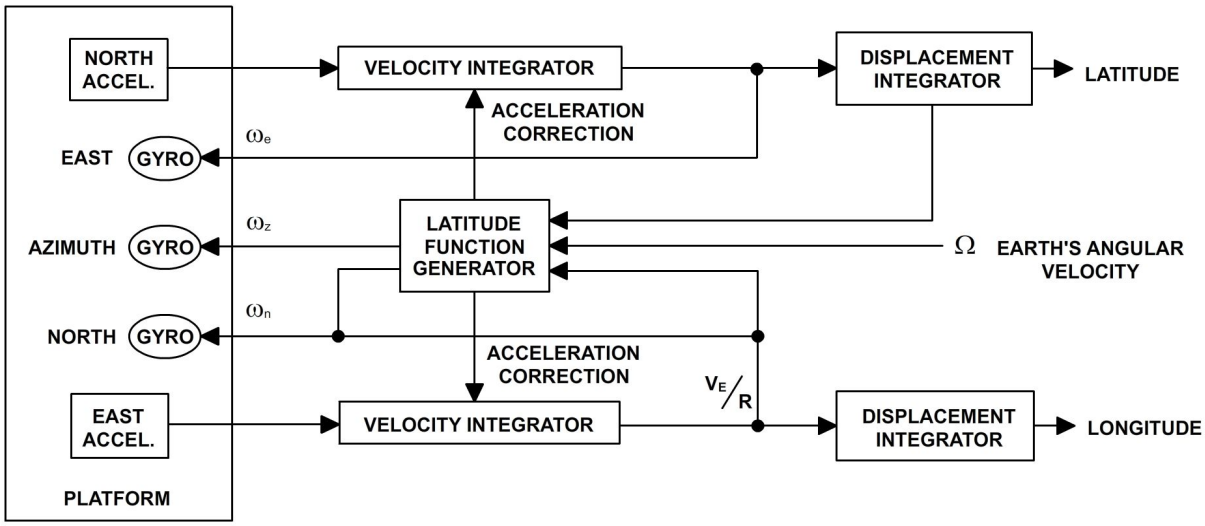


**Figure 7-53 — Typical semianalytic inertial navigation system, block diagram.**

In a semianalytic inertial system, the platform aligns normal to the gravity vector. It may or may not align to true north. The output of the north accelerometer goes to an integrator. Here, the output is summed with acceleration correction terms to derive a true vehicular acceleration over the earth's surface. This acceleration signal is then integrated with respect to time, deriving the north velocity component of the vehicle's track. Through scaling, the INS converts the velocity term to an angular velocity. It then integrates the angular velocity to provide a position readout in the form of latitude. In addition, the latitude function generator uses the north angular velocity signal to develop accelerometer correction terms. It also uses this signal to develop a gyro torquing signal for the east gyro.

The east accelerometer output is summed with accelerometer correction terms and integrated to provide an east component of the vehicle's track. Through scaling, the INS converts the velocity signal to an angular velocity. This angular velocity goes to the latitude function generator. The function generator uses it to develop accelerometer correction terms and torquing signals for the north gyro and the azimuth gyro. In addition, the INS integrates the angular velocity to develop a position readout in the form of longitude.

### Geometric Inertial Navigation System

The geometric INS uses a gyro system that, like the analytic system, is referenced to inertial space in a nonrotating plane. The accelerometers, however, mount on the gimbal structure in a manner as to remain normal to the earth's gravitational field.

*Figure 7-54* shows the relationship of the accelerometers and gyros as the platform moves over the surface of the earth. When the platform is aligned at the equator and then moves north, the gyros maintain their position in inertial space. The accelerometers remain in a plane tangent to the earth's surface at all times.

The main advantage of this system is that the gyros are not torqued. Therefore, scaling of the gyros is not critical.

The major disadvantage is economy. The system requires a high degree of accuracy to position the latitude and longitude gimbals. The semianalytic system requires much less precision to achieve similar accuracy; therefore, it costs less.

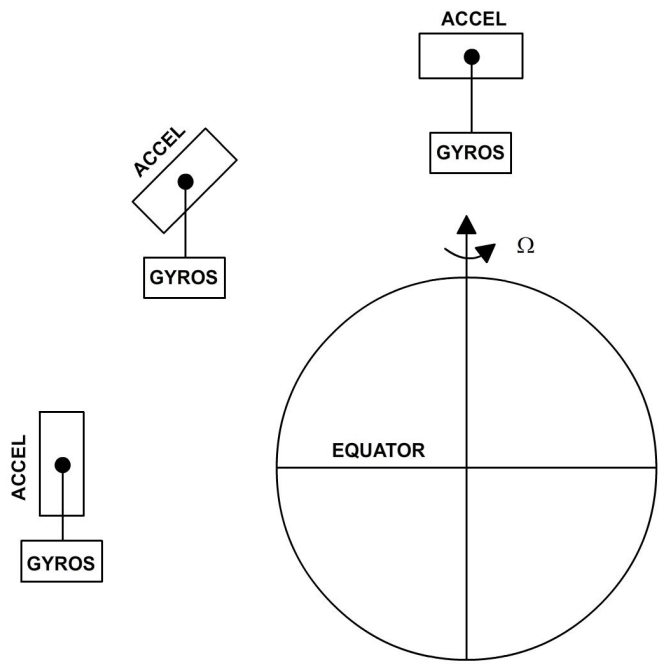


**Figure 7-54 — Transport of the geometric system's stable element.**

### Strap-Down Inertial Navigation System

In the strap-down system, the gyros and accelerometers mount directly to the frame of the vehicle. Its principal use is in ballistic missiles and spacecraft. This type of system can be mechanized for use in aircraft. However, the present state of technology makes it more feasible to use one of the other types of systems for aircraft use.

The strap-down system requires complex digital computers; analog computers are not accurate enough for use in this system. The computer in the strap-down system replaces the gimbal structure as the gimbal structure replaced the physical length of the Schuler pendulum. *Figure 7-55* shows a simplified block diagram of a strap-down inertial navigation system.

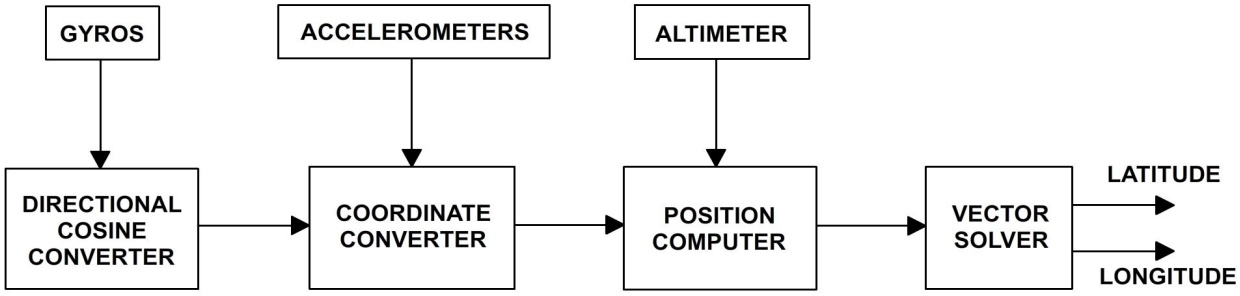


**Figure 7-55 — Strap-down inertial navigation system, block diagram.**

In the strap-down system, the gyros provide angular rates, which the system converts to directional cosines (for example, space vectors). The strap-down uses these signals to determine vehicle attitude about an inertial frame of reference. The coordinate converter, using inputs from the accelerometers and the directional cosine converter, determines accelerations along the inertial reference axes. The position converter accepts inertial acceleration and altitude information to develop Cartesian coordinates representing the vehicle's position in inertial space. These vectors then go to the vector solver, where they are summed to provide readouts of latitude and longitude.

To accomplish strap-down system alignment, you must supply the directional cosines of the vehicle frame to the computer. The vehicle requires no physical orientation.

### Hybrid Inertial Navigation Systems

The hybrid system is a combination of INS and some other type of navigation system. The other navigation system is for updating or improving the accuracy of the inertial navigation system. In other words, the hybrid inertial system combines two navigation systems so that the good characteristics of both are maintained.

There are two types of updating processes used in hybrid systems. One type is the damping effect, which compares the inertial ground velocities with the ground velocities of some other system. The system uses the error, or difference between the two velocities, to damp out platform errors. The other type is the reset method. This method ignores the orientation of the platform and merely resets the position of the velocity shafts periodically.

## CALIBRATION

As you learned earlier in this chapter, variation and deviation affect the accuracy of a magnetic compass. Variation is a natural phenomenon whose magnetic strength varies in intensity throughout the world. Variation is marked on navigation maps and is corrected for by the pilot. You can consider deviation as man-made. The magnetic fields of aircraft components cause deviation. These components are engines, electric equipment, landing gear struts, and flight control surfaces and their control cables. You can keep the effects of deviation to the very minimum by a process called compass swinging.

As an AE, you must be completely familiar with the two methods of compass swinging. These two methods are the MC-2 compass calibration set and the use of a compass rose. For a gyrostabilized compass or inertial navigation system, the MC-2 is considered the primary means of swinging. Deviation in a wet or standby compass is corrected for on a compass rose. The following paragraphs describe the compass rose and the MC-2 calibration set.

## Compass Rose

Aircraft magnetic compasses (wet or standby) have devices called *compensators*, which provide a means for correcting deviation errors. You cannot eliminate all errors, but you can reduce them to a minimum.

Swinging the compass, you first compensate the N-S and E-W headings. Then set the aircraft on every 15- or 30-degree heading on the compass rose. Here, you note the difference between the aircraft heading and the indicated heading. You then adjust the compensators to reduce this difference or deviation to a minimum.

There are two types of compensators. One type is the universal screw type. It consists of an assembly having a group of small compensating magnets permanently installed in it. To change the compensating effect of the assembly, you use two adjusting screws. One screw is for north-south compensation, the other for east-west. The other type of compensator has small, loose magnets that you place in special chambers on the compass as needed. The chamber positions allow one to make east-west corrections. The other (at right angles to the east-west chamber) corrects north-south deviation. Compensation is done only on the cardinal headings on standby compasses. However, on all other compass systems in naval aircraft, compensation is at 15-degree increments.

Before starting the swinging operation, you should make sure all magnetic equipment is in the position it occupies in normal flight. Also, be sure that no one near the aircraft compasses during swinging operations has any magnetic materials on their person. Magnetic materials include tools, pocketknives, mechanical pencils, wristwatches, dog tags, bracelets, eyeglasses, jewelry, officer caps, badges, etc. Remember, too, that you use a nonmagnetic screwdriver in adjusting universal compensator screws.

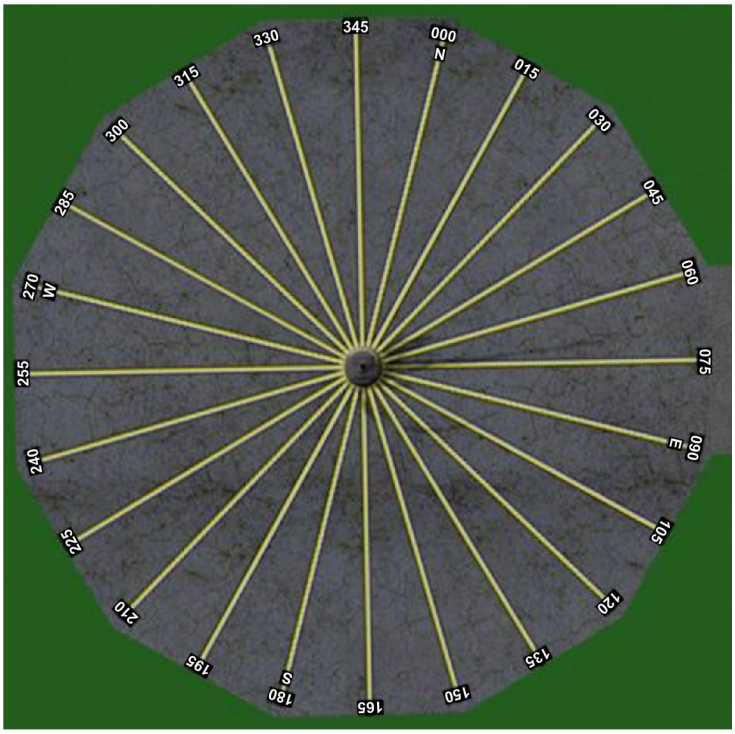


**Figure 7-56 — Compass rose.**

You actually swing a compass in one of several ways. However, as an AE, your chief interest is in ground swings. You usually accomplish a ground swing with the aircraft at rest on a compass rose. Look at *Figure 7-56.*

Most air stations have a compass rose. The compass rose looks much

like an oversized card from a navigation compass. The directions shown by it are magnetic directions, and the north arrow points toward the earth's north magnetic pole. A compass rose may also have a line showing true north.

Jacks, lifts, hoists, or any dolly needed to perform the ground swinging job should preferably be of nonmagnetic material. However, this is not always possible. Devices used in the swinging process must be tested for their effects on the compasses. You do this by moving them about the aircraft in a circle with normal separation distance between the device and the instruments. Do not use devices that cause more than one-quarter degree change in the compass reading.

Trucks, automobiles, railroad cars, and other aircraft containing magnetic metals should not be within the swinging area. These items could have a magnetic effect on the compasses of the aircraft being adjusted. You should also be sure that the compass is in good condition. Examine the compass for clear liquid and proper level. Check to see that the card assembly is level. Also check that it turns freely when the aircraft's tail is in a level flying position.

Set the compensator so it has no effect on the main compass magnets. Using a loose-magnet compensator, remove all loose magnets from their chambers. Set universal screw-type compensators for zero effect by turning both adjusting screws until the dots on the screws match with the dots on the compensator case.

Then, place the aircraft on a south magnetic heading over the compass rose, with the tail in a level flying position. The aircraft engine(s) should be turning, and as many pieces of avionics equipment as possible turned on. This will create as many stray magnetic fields as possible and simulate the condition of the aircraft in flight. Note the compass reading and record it. From this reading, it is simply a matter of algebraic subtraction (or subtraction of numbers having plus and minus signs) to determine the deviation on the south heading. The deviation is the algebraic difference between the magnetic heading and the compass reading. Deviation is the error in a magnetic compass caused by electromagnetic disturbances in the aircraft.

After doing this, place the aircraft on a west heading. Again, note the compass reading and determine the deviation or difference between the magnetic heading and what the compass reads. Next, turn the aircraft heading to magnetic north. Take the compass reading on this heading and determine the deviation. Now subtract, algebraically, the south heading deviation from the north heading deviation and divide the remainder by two.

For example, if the compass reads 175 1/2° while on the south heading (180°0), record this as a deviation of +4 1/2°(180°– 175 1/2°). If the compass reading is too low, the deviation is plus; if the reading is too high, the deviation is minus.

Suppose that on the north (000°), heading, the compass reads 006 1/2°. Such a reading is 6 1/2° too high. You would record this as a deviation of –6 1/2° (000° – 006 1/2°).

The next job is to determine the coefficient of north-south deviation. You accomplish this by subtracting, algebraically, the deviation on the south heading from the deviation on the north heading. You then divide the remainder by two.

$$\frac{(-6\ 1/2^\circ) - (4\ 1/4^\circ)}{2} = \frac{-11^\circ}{2} = -5\ 1/2^\circ$$

The aircraft is still on the north heading and the compass reads 006 1/2°. Since the coefficient of the north-south deviation is – 5 1/2°, you must adjust the north-south

compensator by this amount. The compass reading on the north heading will now be 001°. This adjustment also corrects the south deviation by the same amount (but in the opposite sense). The south heading on the compass will now read 181°. The coefficient of north-south deviation, which is – 5 1/2° in this case, is called coefficient **C.**

On the loose-magnet type compensator, you adjust north-south deviation by inserting the necessary number of magnets into the lateral (athwartship) chamber of the compensator. If the compass has a universal compensator, you make the adjustment by turning the north-south (N-S) compensator screw.

The next step is to determine the east-west deviation. Turn the aircraft heading to magnetic east, according to the compass rose. Record the compass reading on that heading. Now determine the coefficient of east-west deviation, otherwise known as coefficient **B.**

Assume, for example, that the compass reads 276° when the aircraft was on the west (270°, heading. Also assume it reads exactly 90° on the east (90°) heading. You find coefficient **B** by algebraically subtracting the deviation on west (– 6°) from the deviation on east (0°) and dividing by two.

$$\frac{(0°) - (-6°)}{2} = \frac{+6}{2} = +3$$

While the aircraft is on the east heading, adjust the east-west (E-W) compensator to add 3° to the compass reading. This reading becomes 93° on the east heading, and the compass would read 273° on the west heading. Make this adjustment by turning the E-W screw on a universal compensator. On the loose magnet type compensator, add the necessary magnets in the longitudinal (fore-and-aft) chamber. Leaving the aircraft on an east magnetic heading, next compute an overall deviation correction based on coefficient **A.** This coefficient is equal to the algebraic sum of the compass deviations on all four cardinal headings (north, east, south, and west) divided by four.

$$\frac{(-6\ 1/2°) + (-0°) + (4\ 1/2°) + (-6)}{4} = \frac{(-8)}{2} = -2°$$

You must compensate instrument panel compasses for coefficient **A** if it amounts to 2° or more in either direction. When making this correction, leave the magnetic compensators alone. To compensate for coefficient **A,** move the instrument in its mounting.

Compensate panel-mounted compasses for coefficient **A** by slightly realigning the whole instrument panel. You can also turn the compass a little with relation to the front of the panel and placing washers or spacers under its mounting screws.

After completing this swing, swing the aircraft again on at least eight equally spaced headings (for example, 0°, 45°, 90°, 135°, 180°, 225°, 270°, and 315°). Record the compass readings for each heading on a compass correction card. *Figure 7-57* shows an illustration of a compass correction card.

| | COMPENSATING SWING | | | RESIDUAL SWING | |
|---|---|---|---|---|---|
| | ACTUAL HEAD (M) | AIRCRAFT COMP. | DEV'N | ACTUAL HEAD (M) | AIRCRAFT COMP. |
| N 000 | 000 | 006 ½ | –6 ½ | 000 | 001 |
| | | | | 045 | 045 |
| E 090 | 090 | 090 | 0 | 090 | 093 |
| | | | | 135 | 135 |
| S 180 | 180 | 175 ½ | +4 ½ | 180 | 181 |
| | | | | 225 | 225 |
| W 270 | 270 | 276 | –6 | 270 | 273 |
| | | | | 315 | 315 |
| | (1) | (2) | (1) – (2) | (3) | (4) |

IF SWINGING COMPASS USED AHEAD OF AIRCRAFT ADD OR SUBTRACT 180 DEGREES

$$\text{COEFF C} = \frac{N - S}{2} = \frac{(-6\ 1/2°) - (4\ 1/2°)}{2} = \frac{-11°}{2} = -5\ 1/2°$$

$$\text{COEFF B} = \frac{E - W}{2} = \frac{(0°) - (6°)}{2} = \frac{+6°}{2} = +3°$$

$$\text{COEFF A} = \frac{N+E+S+W}{4} = \frac{(-6\ 1/2°) + (0°) + (4\ ½\ °) + (-6°)}{4} = \frac{(-8°)}{4} = -2°$$

| BU# 166983<br>SER# 9548-563<br>SWUNG 2-28-12 | | AIRCRAFT COMPASS<br>BY _____ | |
|---|---|---|---|
| TO FLY | STEER | TO FLY | STEER |
| N | 001 | 0180 | 181 |
| 015 | 016 | 195 | 196 |
| 030 | 030 ½ | 210 | 210 |
| 045 | 045 | 225 | 225 |
| 060 | 061 | 240 | 240 ½ |
| 075 | 078 | 255 | 256 ½ |
| 090 | 093 | 270 | 273 |
| 105 | 107 | 285 | 286 ½ |
| 120 | 121 | 300 | 300 ½ |
| 135 | 135 | 315 | 315 |
| 150 | 150 | 330 | 330 |
| 165 | 165 ½ | 345 | 346 |

**Figure 7-57 — Compass correction card.**

Detach the small right-hand portion of the compass correction card and mount with the compass. It is thus available for ready reference, telling the pilot or navigator the comparative compass headings and magnetic headings. Turn the larger portion of the card into maintenance control for insertion into the aircraft logbook.

## MC-2 Magnetic Compass Calibrator Set

The MC-2 provides a controlled magnetic field (simulated Earth's magnetic field) about the aircraft flux valve to accurately calibrate the compass system. Use of the MC-2 only requires the aircraft be accurately placed on a north-south line, thus eliminating the need for rotating the aircraft on a compass rose. The compass calibrator provides electrical heading inputs from 0° to 345° in 15-degree increments with an accuracy of 0.1°. The compass calibrator can survey an area for magnetic uniformity. It also provides the necessary data for layout and marking of a compass swing site.

The compass calibrator *(Figure 7-58, frame 1)* consists of four major components—the control console, magnetic field monitor, remote transmitter turntable, and field tester. The set also includes various cable assemblies, reels, racks, tripods *(Figure 7-58, frame 2)*, and some special alignment equipment.

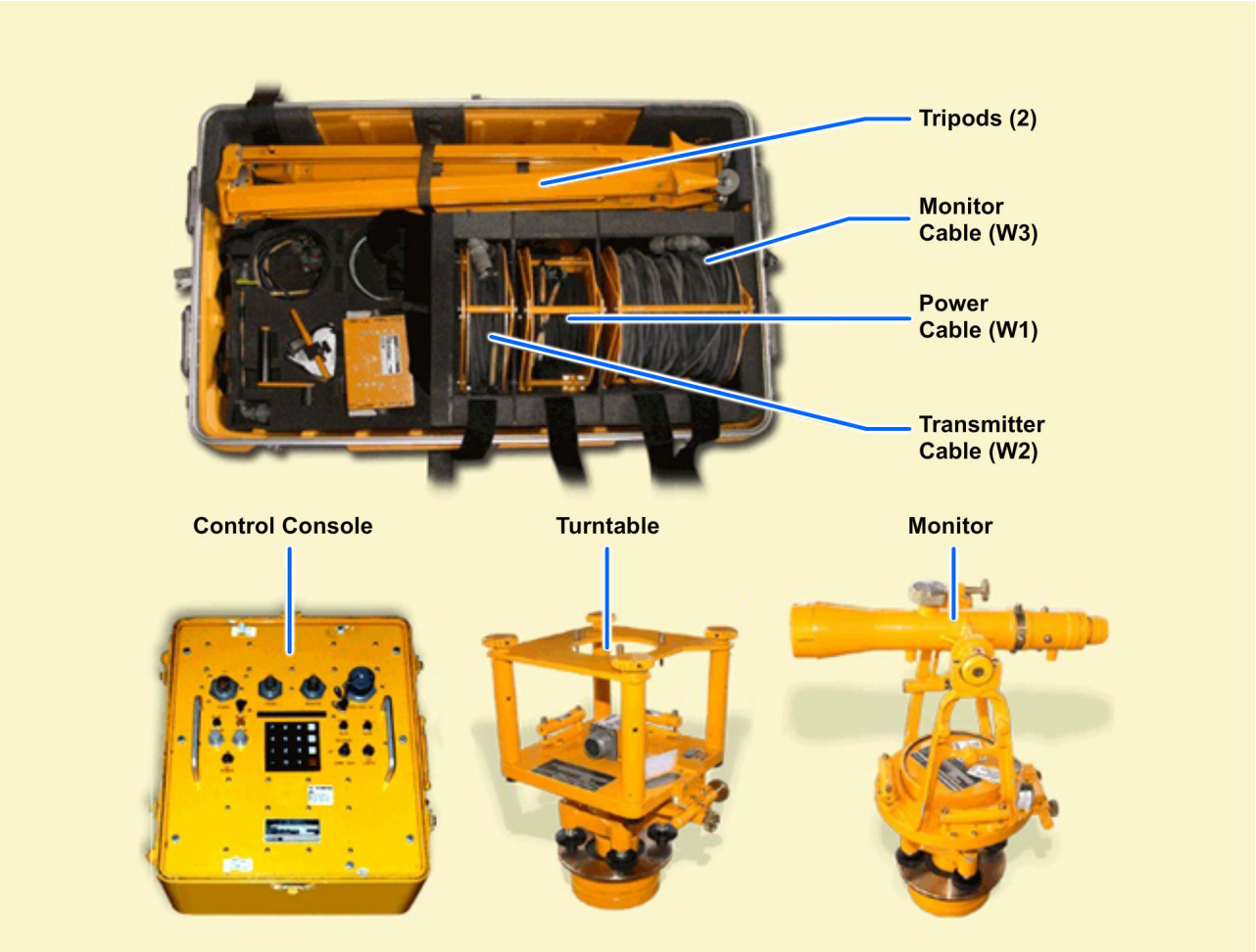


**Figure 7-58 — MC-2 magnetic compass calibrator set.**

The control console contains the controls, indicators, and electronic components that allow the compass calibrator set to operate. It uses 115 volts, 400 Hz at a maximum of 1 ampere. MC-2 changes this electrical power into ac/dc voltages that it requires.

The magnetic field monitor is an engineer's transit that has been modified to operate as a part of the compass calibrator set. The modification consists of installing a magnetic sensing element in place of the magnetic compass. The monitor is of nonferrous and nonmagnetic materials. It has a telescope, a horizontal circular scale with an adjustable vernier azimuth scale, levels, and leveling adjustment screws. The telescope is 22-power with an interior focusing optical system, and rotates 180 ° in a vertical plane.

The remote transmitter turntable is also an engineer-type transit with the compass, vertical circle, and telescope removed. Also included with the turntable is a transmitter mounting bracket and a rain hood.

The field tester is a portable metal-encased tester. It consists of a test panel, a shield can assembly, and a magnetic azimuth reference detector. All connectors, controls, switches, and electronic parts mount on the test panel. The shield can assembly contains a valve assembly within two magnetic shield cans. The magnetic azimuth reference detector consists of a 6-power telescope with azimuth adjustment and a flux valve assembly on a triangular support plate. The valve assembly has an attaching cable assembly.

The alignment equipment *(Figure 7-59)* consists of a telescope, two plate assemblies, shaft coupling, quick connector, plumb bob and adapter, screwdrivers, magnifier, wrenches, and sunshade. The parts you use depend on the aircraft and transmitter under calibration. The telescope is a fixed-focus type, 8-power, with 360-degree azimuth rotation. A drum dial fine-adjusts azimuth, and an azimuth lock prevents unwanted rotation.

**Figure 7-59 — Alignment equipment.**

The compass calibrator set is used to conduct an area magnetic survey. The survey determines the size and direction of the earth's magnetic field at a proposed aircraft swing site. You will also use the compass calibrator to conduct the actual compass swing. The control console provides controlled dc currents for the transmitter. The monitor detects the size and direction of the earth's magnetic field and supplies this information to the control console. You use the alignment equipment with the turntable to optically align the compass system transmitter (flux valve).

A review of the flux valve will be helpful in the following discussion.

In an electrical compass swing, a dc magnetic field is generated in the transmitter and varied in size and direction. This allows the MC-2, in combination with the horizontal

component of the earth's field, to simulate an equivalent Earth's field in the transmitter at a desired heading. Errors in the compass system are measured as the difference between the aircraft magnetic heading and the simulated Earth's field magnetic heading. The aircraft heading shows on the aircraft compass indicator. The simulated Earth's field heading shows by selecting the HEADING SELECTOR switch on the control console.

Controlled dc currents to the secondary coils the transmitter generate an electromagnetic field (electrical swing). By applying a current to coil leg A of the transmitter *(Figure 7-60),* you generate a field that aligns to leg A. In the electrical swing, this field provides the north-south component of the simulated Earth's field. A dc current also goes through coil legs B and C to generate two fields, each aligned to its respective coil. These fields are so oriented that north-south components of these two fields cancel, leaving one east-west component. By reversing the direction of the current flow, you can rotate the east-west component 180°.

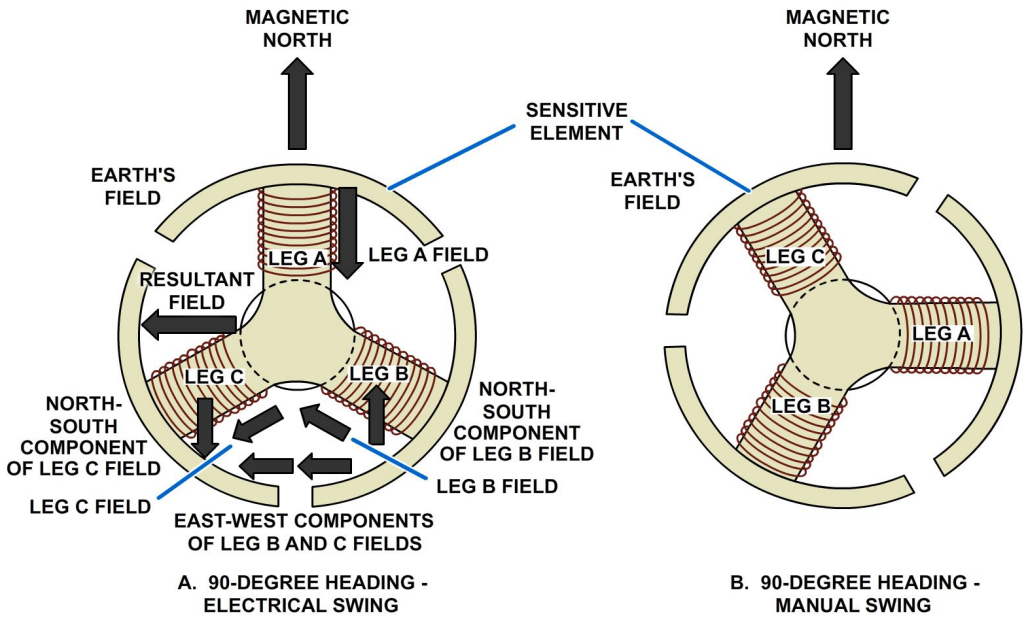


**Figure 7-60 — Electrical swing and manual swing at a 90-degree heading.**

The procedures for an electrical compass swing using the magnetic compass calibrator set are as listed below.

1. Set up the turntable over the spot where the remote compass transmitter will be when the aircraft is on the **north** line.
2. Remove the remote compass transmitter (flux valve) from the aircraft and mount it on the turntable.
3. Determine the alignment of the transmitter to magnetic north and its electrical calibration to the ambient magnetic field. Calibrate the N-S and E-W adjustments on the transmitter.
4. Mount the necessary optical alignment equipment to the remote compass transmitter. Align the telescope to a predetermined target one-half mile or more away.

5. Tow the aircraft into position exactly on the north line by using plumb bobs or some other accurate method.
6. Compute the optical alignment correction. Insert the correction into the optical alignment scope. Replace the compass transmitter in the aircraft (sighting on the same target used in step 4 above).
7. With the transmitter fastened down, reconnect the leads.
8. Using the appropriate adapter cables, connect the compass calibrator set into the compass system.

The aircraft magnetic headings are set in with the heading selector on the control console. Record the errors as the difference between the indicated heading and that set in with the heading selector. Calibrate the compass system components to within 0.10°of the heading selector position.

For more detailed information on compass swinging, refer to *Military Standards,* MIL-STD-765A. Consult this specification for additional information in connection with swinging, compensating, and calibrating compasses.

## GLOBAL POSITIONING SYSTEM FUNDAMENTALS

Global Positioning System (GPS) is funded by and controlled by the U. S. Department of Defense (DOD). While there are many thousands of civilian users of GPS world-wide, the system was designed for and is operated by the U. S. military. GPS provides specially coded satellite signals that can be processed in a GPS receiver, enabling the receiver to compute position, velocity, and time. Four GPS satellite signals are used to compute positions in three dimensions *(Figure 7-61, frames 1 and 2)* and the time offset in the receiver clock.

GPS is a one-way (listen only) system, in which the satellites transmit signals but are unaware who is using the signal (no receiving function). The user (or listener) does not transmit a signal, and therefore cannot be detected by the enemy (military concern), and cannot be charged for using the system (civilian concern).

As GPS is a multi-satellite system, there are always a number of satellites visible simultaneously anywhere on the globe and at any time. The Satellite Constellation is made up of 24 operational satellites in 10,898 mile high, semi-synchronous orbits. A minimum of 5 satellites are observable from anywhere on Earth with four satellites required to produce the most accurate position solution.

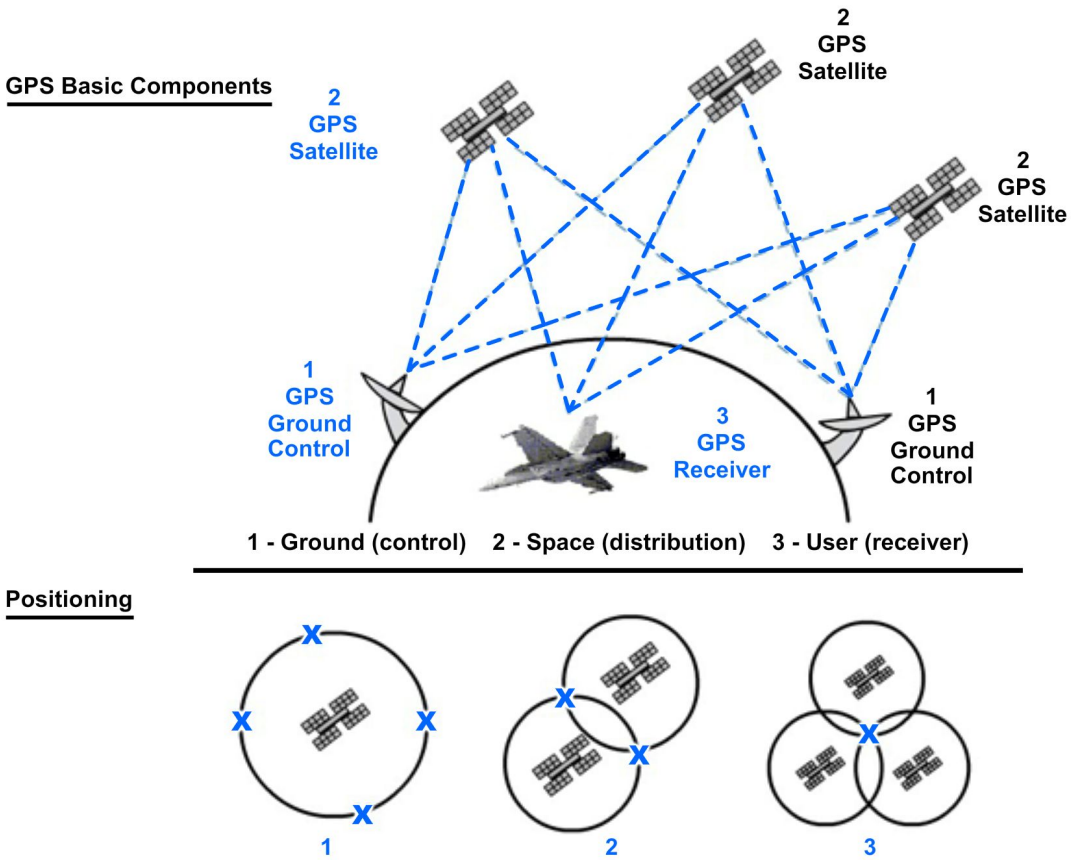


**Figure 7-61 — GPS basic components.**

GPS can support a number of positioning and measurement modes in order to satisfy simultaneously a variety of users, from those requiring only navigation (decameter) accuracies to those demanding very high (millimeter - centimeter) accuracies for military use which are dependent on cryptographic codes.

## GPS Today

The evolution of airborne navigation from compasses and inertial gyros of the 1950s to the GPS receivers of today has produced a dramatic increase in the speed and accuracy with which an aircraft's position on the earth can be determined.

GPS was rapidly adapted for aviation, as it can give a position (latitude, longitude and height) directly, without the need to measure angles and distances between intermediate points. Position can now be established almost anywhere as it is only necessary to have a clear view of the sky so the signal from the GPS satellites can be received clearly.

Today's GPS satellites transmit two carrier frequencies that are commonly referred to as L1 and L2, both of which contain codes that provide positioning, timing, and navigation information. Utilizing these frequencies and codes allows GPS receivers to track several satellite signals at the same time, so that precise positioning can be calculated anywhere on Earth.

Interaction Available

As shown in *Table 7-1,* the L1 carrier contains Coarse/Acquisition (CA) code, which is commercially available. The L2 carrier contains only the P/Y, which is an encrypted code reserved for military use. Crypto keys enable GPS to receive highly accurate P-code (precise) navigation signals.

**Table 7-1 — GPS Carriers**

| Carrier | Frequency | Code |
|---|---|---|
| L1 | 1575.42 $MH_Z$ | C/A and P/Y |
| L2 | 1227.6 $MH_Z$ | L2C and P/Y |

Each satellite transmits two RF signals. Each signal is modulated with a unique code sequence and navigation data message. The code sequence allows the GPS to identify each satellite. The navigation data message provides the GPS with ephemeris and almanac data. Almanac data represents current satellite positions while ephemeris data represents satellite clock and position errors calculated by dedicated ground stations.

The GPS receives, tracks, and processes L1 and L2 frequency band RF GPS signals from the antenna and provides Position, Velocity, and Time (PVT) information to aircraft interfaces. The GPS is made up of hardware and software to do the GPS signal navigation tasks and to do Built-in Test (BIT) on the GPS receiver and the batteries installed. Signal processing involves reception and amplification of the satellite signal, sequential code and carrier tracking to measure pseudo-range, delta range, and data demodulation to verify correct reception.

GPS aircraft position data is not susceptible to local atmospheric pressure variations or other environmental effects but it is affected by two types of atmospheric delays which can affect the accuracy of satellite signal measurements.

Tropospheric delay can be predicted and included in the satellite almanac data. After collecting the almanac data, the GPS removes the predicted delay from the satellite signal measurements.

Ionospheric delay occurs because the ionosphere is thicker in some areas than in others *(Figure 7-62)*. This delay causes a greater phase shift of the L2 RF signal than in the L1 RF signal. The delay is measured by the difference in phase shift between the two signals.

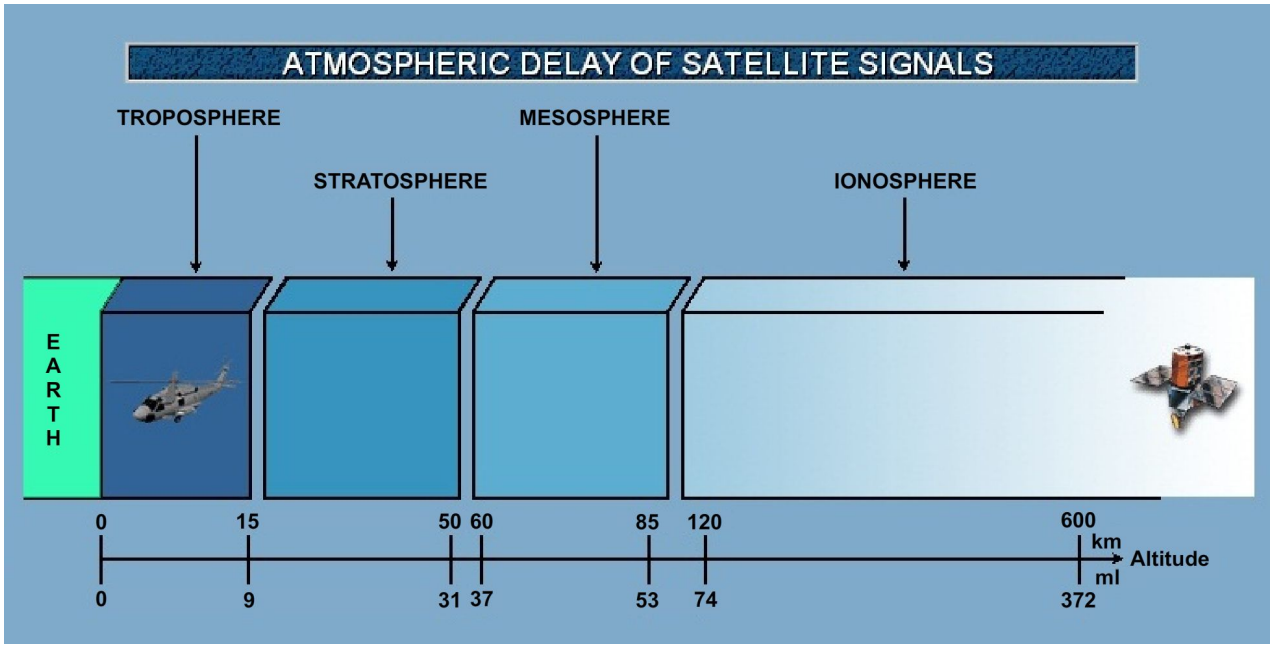


**Figure 7-62 — GPS atmospheric delay.**

### GPS in Naval Aircraft

The typical GPS you will encounter on naval aircraft are comprised of the following components:

**GPS receiver** – Receives modulated navigation signals from satellites to determine aircraft PVT and then provides PVT information to aircraft interfaces for use by other navigation and sensor systems. The receivers have batteries to maintain nonvolatile memory when aircraft power is removed.

> **NOTE**
>
> Nonvolatile memory can include:
>
> 1. Satellite tracking information
> 2. Last computed position and velocity
> 3. Selective availability and antispoofing data
> 4. Waypoint data
> 5. GPS Crypto key data

The GPS receiver determines distance to a satellite by measuring the time difference between when the satellite transmits the signal and the time GPS receives the signal. The time the GPS receives the signal is determined by the GPS clock. When the GPS clock is not perfectly synchronized with the satellite clock, the time measurement is inaccurate.

The inaccurate time measurement used in the distance calculations prevents accurate GPS position to be found. The satellite clock error is measured by a dedicated ground station and the correct data is included in the data sent to the GPS receiver. The sole purpose of one of the four satellites is to provide additional measurement data needed for GPS to calculate clock error common to all distance measurements. Once the clock error is found, it is removed from the distance measurements.

**GPS antenna** – Usually flush mounted on the aircraft's upper fuselage surface and provides RF navigation signals to GPS Receiver in L1 and L2 range.

**RF cable assembly** – A coaxial cable that carries the RF signals from the antenna to the GPS receiver. The cable has a frequency range of 1 to 1.6GHz and usually has maximum attenuation values over this frequency range that must be periodically verified.

**Keyfill panel** – Can be located in the nose landing gear wheelwell, avionics bays, cockpit or crew section of the aircraft and contains the following components: data fill connector, data fill indicator and data fill switch.

# End of Chapter 7

# COMPASS AND INERTIAL NAVIGATION SYSTEMS

## Review Questions

7-1. A point that is defined by stated or implied coordinates is known as a _____.

A. direction
B. reference
C. position
D. destination

7-2. The intended horizontal direction of travel is known as _____.

A. course
B. direction
C. position
D. heading

7-3. In what two reference directions can you express bearings?

A. Radio bearing and visual bearing
B. Magnetic heading and true heading
C. True north and the direction in which you are pointing
D. Relative and magnetic

7-4. The east/west geographical coordinate is known as _____.

A. latitude
B. longitude
C. meridian
D. parallel

7-5. You measure longitude 180° east or west from what point?

A. The equator
B. The pole
C. The agonic line
D. The prime meridian

7-6. The angle between true north and the direction of the earth's magnetic field is known as _____.

A. lines of magnetic force
B. direction
C. variation
D. agonic line

7-7. How do you label variation?

A. Angle of declination
B. East or west, respectively, of true north
C. Difference in direction of heading and true north
D. Comparison from north and true north

7-8. Magnetic influences cause what type of error in magnetic compasses?

A. Deviation
B. Variation
C. Swinging
D. Deflection

7-9. The net result of both variation and deviation is known as _____.

A. compensating
B. compass swinging
C. compass error
D. deviation plus

7-10. What should you do when variation and deviation have the same name to obtain compass error?

A. Add to get compass error
B. Subtract to get compass error
C. Subtract the smaller from the larger
D. Divide the larger from the smaller

7-11. You can determine a position from the record of a previously known position, course, speed, and time traveled by what process?

A. Pilotage
B. Magnetic dip
C. Compass error
D. Dead reckoning

7-12. What navigation system makes use of the physical laws of motion that Newton described three centuries ago?

A. Magnetic
B. Inertial
C. Observation
D. Direction

7-13. What is the purpose of the four-gimbal system in Inertial Navigation Systems?

A. Provides pitch and roll for the aircraft
B. Allows the platform to retain the original orientation regardless of aircraft maneuvers
C. Shows the amounts of deflections in degrees
D. Measures the rate of change in the motion of the aircraft

7-14. What is used primarily to provide visual information concerning aircraft attitude, steering, and navigation on a CRT display or mechanical dial indicator?

A. Azimuth Sensing
B. Control Amplifier
C. Horizontal Indicator
D. Memory Unit

7-15. When operating the AN/ASN-50 attitude heading reference system, when do you use the compass mode?

A. When the displacement gyroscope is malfunctioning
B. When operating at latitudes greater than 700 feet
C. While in areas where the earth's magnetic field has appreciable distortion
D. When the flux valve fails

7-16. What is the operating principle of the Inertial Navigation System (INS)?

A. Acceleration is velocity
B. Velocity with respect to time
C. Newton's first law of motion
D. Acceleration and the pull of gravity

7-17. What must an object first experience before its state of rest or state of motion can change?

A. Acceleration
B. Change of displacement
C. Physical property change
D. Change of motion

7-18. What is the result of acceleration being integrated over a specific period of time?

A. Direction
B. Displacement
C. Time differential
D. Velocity

7-19. What is the purpose of an INS?

A. To keep track of acceleration
B. To keep track of position
C. To track the total distance traveled
D. To detect and compute changes in displacement

7-20. What is the primary data source for the INS?

A. The digital computer
B. The gyros
C. The integrator
D. The accelerometer

7-21. What allows the INS to determine total true accelerations in a horizontal plane for any movement in any direction?

A. Mounting on a stable element together with gyroscopes
B. Mounting another accelerometer perpendicular to the first one
C. Holding the sensitive axis of the accelerometer normal to the gravitational field
D. Using integrators to convert the measured acceleration to aircraft position information

7-22. What prevents gimbal lock making the INS a true all-attitude system?

A. The stable element mount
B. The gimbal axes
C. The inner roll gimbal
D. The synchros

7-23. How long is the period of oscillation for the Schuler pendulum?

A. 34.4 minutes
B. 44 minutes
C. 84.4 minutes
D. 94 minutes

7-24. False accelerations sensed when the platform is torqued to maintain its plane of reference are known as _____.

A. centripetal corrections
B. Coriolis corrections
C. centripetal errors
D. linear accelerations

7-25. Which are three basic external references that may be used to align an INS?

A. Surveyed lines, bench marks and bubble levels
B. Terrestrial, celestial, and inertial
C. Optical devices, electromechanical devices, and inertial sensing instruments
D. Star trackers, radio sextants and transfer devices

7-26. The rate at which a gyro precesses is proportional to the angle between its spin axis and the spin axis of the _____.

A. platform
B. gyros
C. accelerometer
D. earth

7-27. What INS solved the problem of operating an inertial system at the poles?

A. Wander-azimuth
B. Gyrocompassing
C. Centripetal
D. Northpointing

7-28. Having to maintain the accelerometer referenced to a fixed point in inertial space is a significant disadvantage of the _____.

A. semianalytic system
B. pure inertial navigation system
C. analytic inertial navigation system
D. strap-down system

7-29. What is the main advantage of the geometric inertial navigation system?

A. It is referenced to inertial space.
B. The gyros are not torqued.
C. The accelerometers remain in a plane tangent to the earth's surface.
D. The platform is aligned at the equator and then moves north.

7-30. What two types of compensators are used on flux valves?

A. Magnetic and nonmagnetic
B. Universal screw and the loose magnet type
C. Swinging and compensating
D. Standby and magnetic

7-31. GPS provides specially coded satellite signals that can be processed in a GPS receiver, enabling the receiver to compute position, velocity, and _____.

A. size
B. distance
C. time
D. frequency

7-32. What is the minimum number of observable satellites that is required to produce the most accurate position solution?

A. Two
B. Three
C. Four
D. Five

7-33. What type of signal is transmitted from each satellite?

A. AC
B. CA
C. DC
D. RF

7-34. GPS can give a position (latitude, longitude and height) directly, without the need to _____.

A. transmit signals to the user even when not using the signal
B. compute positions in three dimensions
C. measure angles and distances between intermediate points
D. be observable from anywhere on Earth

# RATE TRAINING MANUAL – User Update

CNATT makes every effort to keep their manuals up-to-date and free of technical errors. We appreciate your help in this process. If you have an idea for improving this manual, or if you find an error, a typographical mistake, or an inaccuracy in CNATT manuals, please write or email us, using this form or a photocopy. Be sure to include the exact chapter number, topic, detailed description, and correction, if applicable. Your input will be brought to the attention of the Technical Review Committee. Thank you for your assistance.

Write: CNATT AV Rate Training Manager
230 Chevalier Field Avenue
Pensacola, FL 32508
COMM: (850) 452-9700 utilize voice directory for AE/AT Rate Training Manager.
DSN: 922-9700 utilize voice directory for AE/AT Rate Training Manager.

E-mail: Refer to NKO AE rate training web page for curent contact information.

Rate____ Course Name_____

Revision Date_____ Chapter Number____ Page Number(s)_____

Description

_____

_____

_____

(Optional) Correction

_____

_____

_____

(Optional) Your Name and Address

_____

_____

_____