CHAPTER 5

LINE OPERATIONS AND SPECIAL PROGRAMS

One of the busiest, most important and dangerous divisions in a squadron is the line division. Upon reporting to a squadron, no matter your rate or paygrade, you may be assigned to the line division. As an Airman, or third class petty officer, you may become a plane captain. A plane captain has many responsibilities in flight operations and in the day-to-day maintenance of modern aircraft.

As a more senior petty officer or a Chief, you may be assigned as the LPO or Branch Chief. It is important for you to know how the line division operates and the safety factors involved with line operations. This chapter briefly outlines some of these crucial factors.

ORGANIZATION

LEARNING OBJECTIVE: Identify the organization of the line division and define the responsibilities and qualifications of a plane captain.

The following text discusses the organization of the line division. Knowledge about the line organization is important because it will help you perform your duties.

The line division is a division within the maintenance department. Figure 5-1 shows how the line division fits within the maintenance department. The aircraft maintenance officer is the department

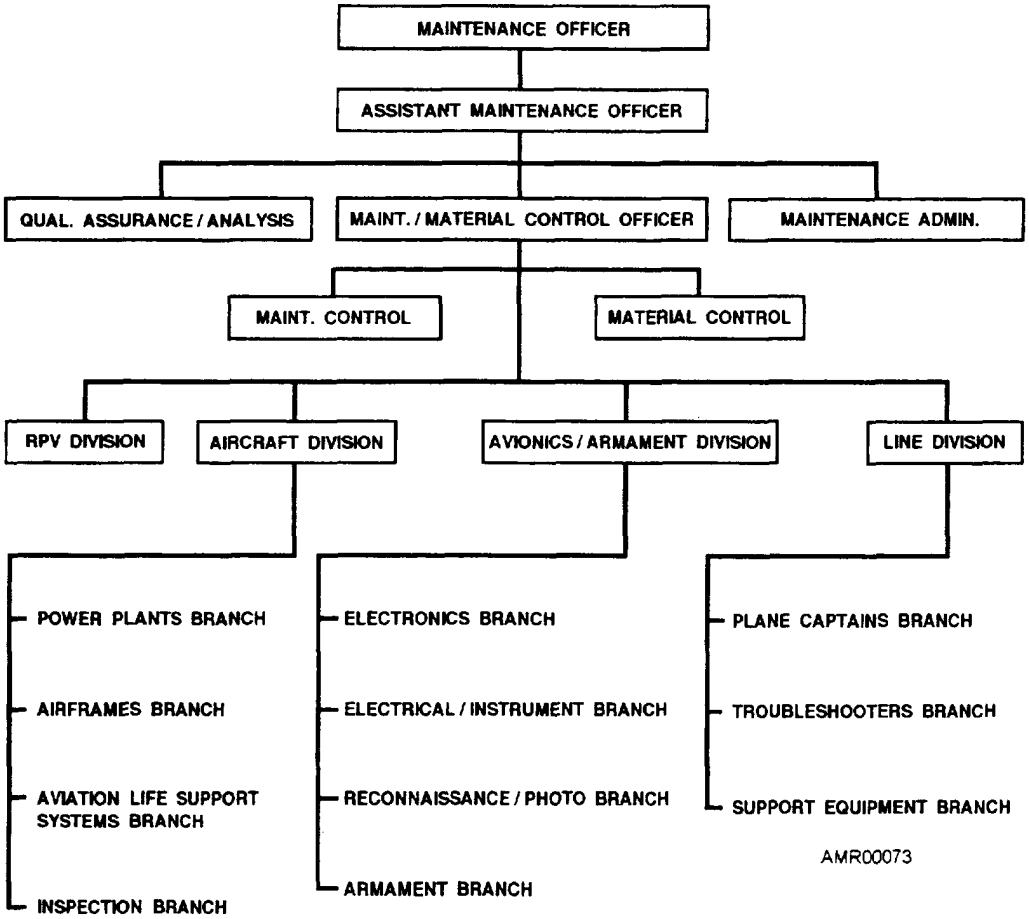

Figure 5-1.—Navy O-level maintenance department organization.

head, and each division has a division officer. The size of the squadron will determine if you have a branch officer. The line chief petty officer (CPO) is the division CPO. Normally, you will work directly for the line petty officer or a shift supervisor. There are three branches (two afloat) within the line division. The following paragraphs discuss these branches.

TROUBLESHOOTER BRANCH

The troubleshooter branch provides a rapid means of troubleshooting and repairing discrepancies discovered on the flight line. Also, troubleshooters are technical advisors to the plane captains. Troubleshooters may be permanently assigned to the line division or they may be temporarily assigned from other work centers on a daily or hourly basis. They must be knowledgeable in line operations, flight line safety, and aircraft systems.

SUPPORT EQUIPMENT BRANCH

Only shore-based squadrons have support equipment (SE) branches. Lack of space aboard ship makes it impossible to store SE; therefore, an SE branch is not possible. Normally, your squadron will check out SE needed on the line. When SE is no longer needed, it is returned to the aircraft intermediate maintenance department (AIMD). The SE branch is responsible for the SE used by the squadron. This responsibility includes the daily/operational inspections performed on the equipment, and in some cases, minor maintenance. Refer to local procedures when you work with SE.

PLANE CAPTAIN BRANCH

The plane captain branch of the line division is made up of qualified plane captains and trainees (persons in training to become qualified plane captains). This branch normally has between 75 and 95 percent of the total personnel assigned to the line division. The branch does routine maintenance (daily/turnaround inspections and cleaning) and other organizational maintenance assigned by maintenance control.

You cannot become a qualified plane captain automatically. You must work long hours and demonstrate that you know the aircraft and its operation (orally and in writing). After demonstrating your ability. you will be designated, in writing, as a plane captain by the commanding officer. The following paragraphs discuss the duties and qualifications of a plane captain.

Plane Captain Duties

Because naval aircraft are very complex, the plane captain does not have in-depth knowledge of all the systems contained in the aircraft. Therefore, technicians other than the plane captain must perform those portions of the daily and turnaround/preflight inspections that are beyond the technical qualifications of the plane captain. This assistance does not relieve the plane captain of their overall responsibility for the aircraft. The following is a list of the minimum duties of a plane captain:

- Perform daily, preflight, postflight, and turnaround inspections with assisting personnel, and assist others in performing O-level maintenance.
- Assists the pilot in flight preparation and advises the pilot of the material condition of the aircraft.
- Responsible for the cleanliness and prevention of corrosion on the aircraft by pursuing an effective and continual preventive maintenance program.
- Perform the work required and assist on phase, special, and conditional inspections within the rating specialty as required by maintenance requirements cards (MRCs).

Plane Captain Qualifications

Assignment as a plane captain carries a high degree of responsibility. The selection of the right person to be a plane captain is important. Regardless of rating, this person must possess the mechanical aptitude, personal integrity, and motivation necessary for the job. These qualities help to ensure that the aircraft is properly inspected and serviced before each flight. A broad screening of available personnel in the aviation ratings and comprehensive formal and on-the-job (OJT) training programs ensure that only the most qualified individuals are designated as plane captains. The following is a list of qualifications for plane captains.

- Possess the qualities of personal integrity, maturity, judgement, and aptitude.
- Demonstrate knowledge of the particular type of aircraft and its systems, including its cockpit, ejection seats, and controls.
- Demonstrate knowledge of the ordnance or armament equipment installed in or on the aircraft, and ensure that the armament, ejection seat, and other cartridge-activated devices are in a safe and ready condition during daily, preflight, postflight, and turnaround inspections.

- Demonstrate knowledge of and compliance with fueling and defueling procedures, and follow the applicable safety instructions.

- Demonstrate ability to use the methods of aircraft security required for various weather conditions and shipboard operations. Give particular attention to the security of control surfaces and the correct points for attaching tie-downs.

- Demonstrate, in writing and by practical application, knowledge of the procedures for riding brakes and any peculiarities of the braking system of the assigned aircraft, as well as a knowledge of the standard signals (including those contained in NATOPS, both hand and wand) used for controlling aircraft on the ground or flight deck.

Q1. To what department is the line division assigned?

Q2. What branch is responsible for the support equipment used by the squadron?

Q3. In most squadrons, 75 to 95% of the personnel assigned to the line division are assigned to what branch?

Q4. After demonstrating your abilities as a plane captain, who has the final authority to designate you a plane captain?

AIRCRAFT SERVICING

LEARNING OBJECTIVE: Recognize safety procedures and the proper equipment used in servicing aircraft.

Aircraft servicing is an important part of daily and turnaround inspections that plane captains perform, Even when plane captains do not personally perform the servicing, they must still ensure that it is done correctly.

A typical daily/turnaround record is shown in figure 5-2. However, the aircraft may require servicing at more frequent intervals. Daily and turnaround inspections are covered later in this chapter.

The servicing of an aircraft includes replenishing fuel, oil, hydraulic fluid, and other consumable materials. Also, the tires are checked for proper inflation, struts for proper extension, and the various air storage units for proper pressure.

GENERAL SAFETY PRACTICES

This section lists some general safety practices that are important in day to day maintenance operations.

Fire Hazards

Smoking is not permitted around the aircraft during fueling. Also, smoking or naked lights (such as oil lanterns, candles, matches, exposed electric switches, slip rings or commutators, dynamos or motors, any spark-producing electrical equipment, or any burning material) are not permitted within 100 feet of an aircraft that is being refueled or the fuel storage tanks. No lights other than approved explosionproof lights are permitted within 50 feet of refueling operations. No light of any sort may be placed where it can come in contact with spilled fuel. Warning signs should be posted as a precautionary measure.

All accidental spillage of aircraft fuels or other combustible liquids must be contained and removed immediately with absorbent material, by covering with a foam blanket, or by neutralizing by other means to prevent ignition. Notify the proper fire authorities anytime a large amount of aviation fuel is spilled.

Nonspark tools must be used when work is done on any part of a system or unit that is designed for storing or handling combustible liquids. The use of leaky tanks or fuel lines is not permitted. Repairs must be made upon discovery. Always keep in mind the hazards involved.

Aircraft should be fueled in a safe place. Shore-based aircraft may not be fueled or defueled in a hangar or other enclosed space except in an emergency. Aircraft should be free from fire hazards, have the engine switches in the OFF position, and have chocks placed under the wheels before fueling or defueling operations are begun.

CAUTION

You should guard against breathing hydrocarbon (fuel) vapors. They may cause sickness, or they may be fatal. Do not let fumes accumulate. Use adequate ventilating measures. Also, avoid getting fuel on your clothes, skin, or eyes because of the high lead content. If your clothing becomes saturated with fuel, remove them as soon as possible. The parts of your body that are exposed to fuel should be washed thoroughly with soap and water. Clothing saturated with fuel creates a dangerous fire hazard. Also, painful blisters similar to fire burns may be caused by direct contact of the skin with fuel. If fuel gets in your eyes, flush them with water and obtain medical attention.

PREFLIGHT / DAILY / TURNAROUND / POSTFLIGHT MAINTENANCE RECORD

1. ☐ PREFLIGHT ☐ DAILY ☐ TURNAROUND ☐ POSTFLIGHT

2. DATE AND TIME STARTED _____ COMPLETED _____	3. T/M/S	4. BUNO	5. SIDE NO.	6. ACTIVITY

7. CARD NUMBER/ RTG/MOS	8. TOOL CONTAINER NUMBER	9. DISCREPANCY/JCN *	10. CORRECTED		11. SIGNATURE AND RATE/MOS **
			YES	NO	

SAMPLE

* JCN NOT REQUIRED FOR CORRECTED SERVICING ACTIONS.
** SIGNATURES CERTIFY THAT MRCs HAVE BEEN COMPLIED WITH, VIDS/MAFs HAVE BEEN INITIATED FOR DISCREPANCIES, AND ALL TOOLS ARE ACCOUNTED FOR.

12 MAINTENANCE CONTROL REPRESENTATIVE
(Signature and rate/rank)

OPNAV 4790/38 (REV 2/85) PREVIOUS EDITIONS MAY BE USED UNTIL SUPPLY IS EXHAUSTED S/N 0107-LF-047-9191

AMR00074

Figure 5-2.—Preflight/Daily/Turnaround/Postflight Maintenance Record.

Aircraft Walkways

NO STEP markings provide guidance on how to use walkways on aircraft wings and stabilizers as well as on the fuselage. These markings vary with different models of aircraft; however, some general areas are discussed in the following text and are shown in figure 5-3.

NO STEP markings on the wings form a boundary along leading and trailing edges. The area within the boundary is the walkway. Do not step on the wingtips or leading or trailing edges of the wings.

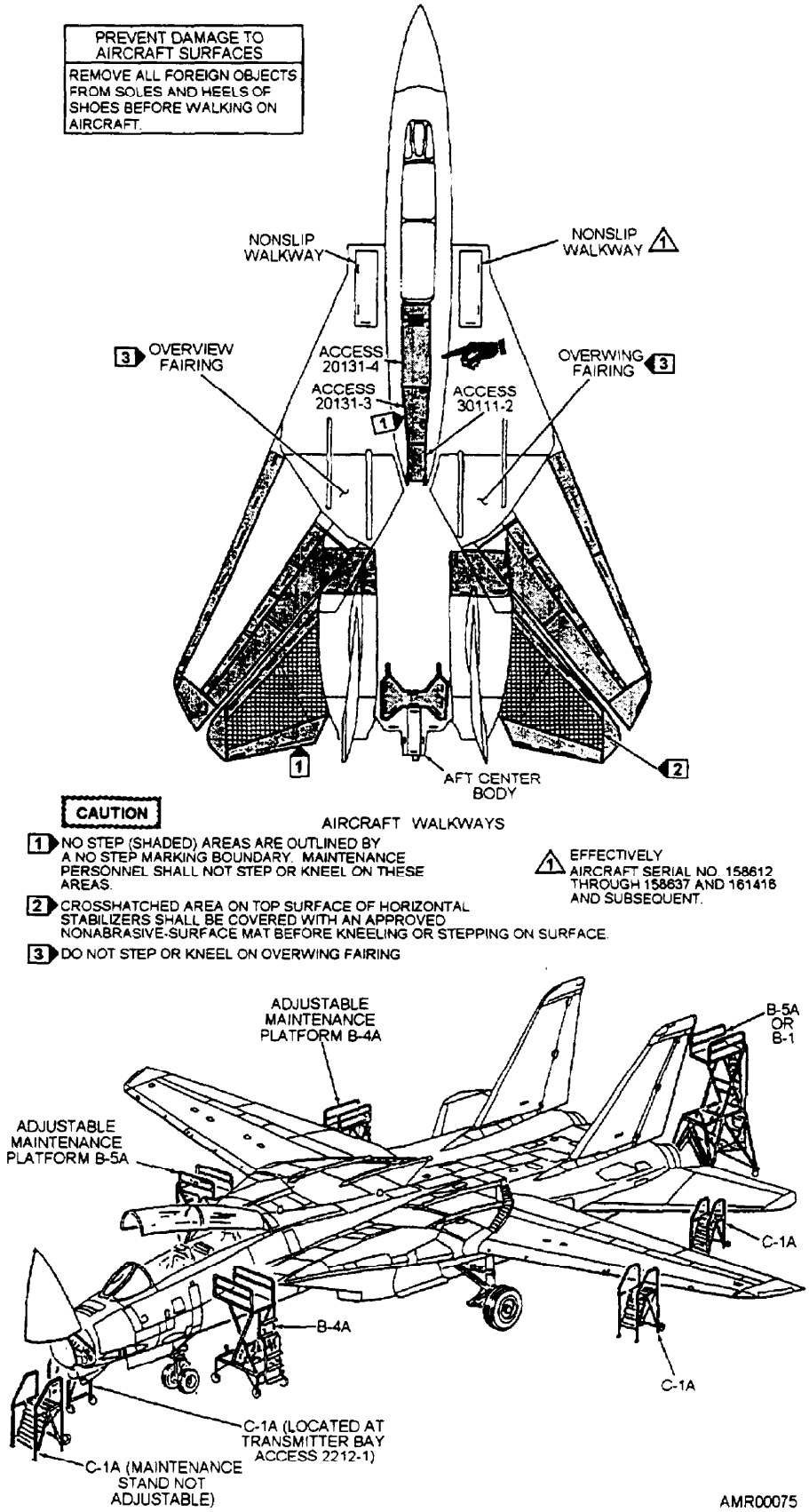

Figure 5-3.—Aircraft walkways and maintenance platform placement.

There are **NO STEP** markings on the leading and trailing edges of the horizontal stabilizer. These markings form a boundary around the surface on which maintenance personnel must not step or kneel upon unless they cover it with an approved nonabrasive surface mat. The mat distributes the load over a greater area. Stepping or kneeling on the unprotected horizontal stabilizer causes localized stressed areas that could result in structural damage to the surface.

> **CAUTION**
>
> Do not step or kneel on the overwing fairings.

There are four **NO STEP** areas on the fuselage. These areas are aft center body, the upper speed brake, the area directly aft of overwing fairings, and the area directly behind the canopy. The **NO STEP** markings on the upper speed brake, aft center body, and the area directly aft of the over-wing fairing form a boundary around each of these surfaces on which maintenance personnel should not step.

Maintenance Platform Placement

The placement of maintenance platforms about an aircraft is shown in figure 5-3. Use the B-4 and B-5A adjustable maintenance platforms to gain access to the top of the aircraft. Then use aircraft walkways to move to the maintenance area.

NOTE: The B-1 stand may be used as an alternate for the B-5A stand.

Q5. Smoking and naked lights are not permitted within how many feet of a fueling operation?

Q6. What type tools must be used when work is being performed on a system or unit that is designed for storing or handling combustible liquids.

Q7. What are the four NO STEP areas on the fuselage?

FUEL REPLENISHMENT

Aviation fuel is a highly volatile liquid that gives off a vapor. The vapor can be ignited by static sparks from tools, hot exhaust pipes, lighted cigarettes, and electrical devices. Thus, you must follow all fire precautions during the fueling process.

When an aircraft is to be fueled by a truck, do not locate the aircraft near possible sources of ignition, such as grinding, drilling, or welding operations. When possible, refueling an aircraft from a truck should be carried out 50 feet from any other aircraft or structure and 75 feet from any operating radar set. You should consider wind direction so fuel vapors will not be carried toward a source of ignition.

The tank truck should be driven to a point as far from the aircraft as the length of hose permits, but never within 10 feet of the aircraft, and preferably to the windward (upwind) side of the aircraft. The truck must be parked parallel to or heading away from the wing, or in such a position that it can be driven away quickly in case there is a fire. As soon as the fueling operation has been completed, the truck should be driven away from the vicinity of the aircraft.

Refueling crews consist of a minimum of three people. One person stands with the fire-fighting equipment. A second person stays with the truck. The third person handles the fuel hose at the aircraft and fills the tanks. A member of the refueling crew makes sure that both the aircraft and truck are properly grounded. This prevents sparks from static electricity. Before starting fueling operations, the plane captain should check to see that all radio equipment and unnecessary electrical switches are turned off. Unless it is necessary to operate equipment involved with refueling, the crew should not connect outside electrical power to the aircraft. Before beginning refueling, the refueling crew should identify the aviation fuel. The type of fuel contained in the tank of a fuel truck is displayed across the side of each tank in 6-inch-high red lettering superimposed on 8-inch-high white reflective tape.

As a plane captain or trainee who services an aircraft, you must know the various grades of fuel and the fuel requirements of the aircraft. This knowledge ensures that you will always use the correct fuel.

Several systems are used to refuel naval aircraft. Some are refueled by the gravity system. Other aircraft may be refueled by either the gravity or pressure fueling system. Still other aircraft are fueled from a single point by the pressure fueling system.

Gravity Fueling

The hookup used for gravity fueling is shown in figure 5-4. The nozzle is grounded and then inserted into the cell filler neck. The tank is filled to the bottom of the filler port neck. The nozzle is always grounded

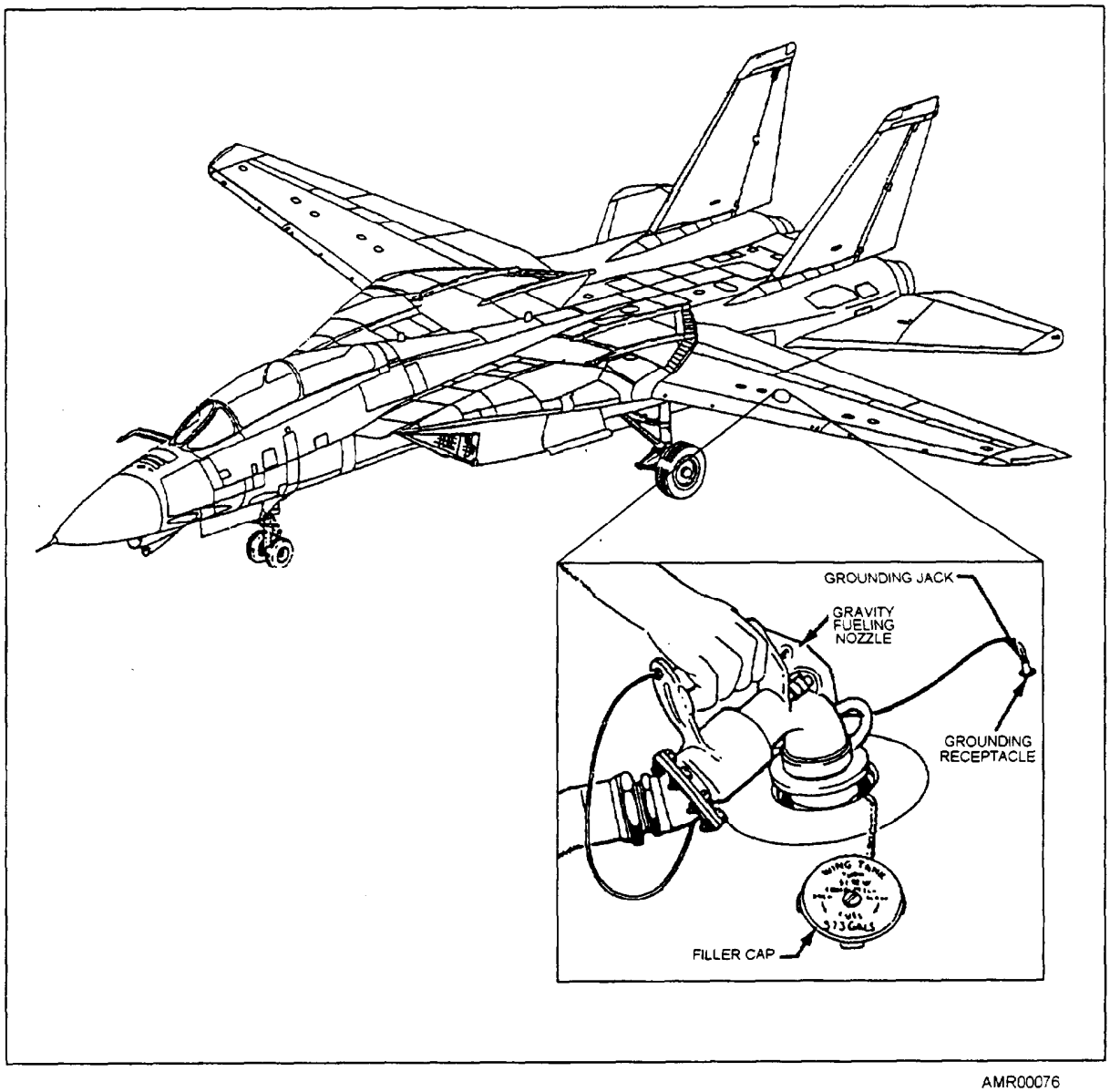

Figure 5-4.—Gravity fueling.

before it is placed in the filler neck to prevent sparks caused by static electricity. Static electricity is built up by the fuel flowing through the hose. The nozzle should be supported while it is in the filler neck. This will prevent damage to the filler neck and, in the case of aircraft that use bladder-type fuel cells (cells made from a type of rubberized nylon cloth), prevent the possibility of damaging the cell with the end of the nozzle.

Pressure Fueling

Most naval aircraft are refueled by the pressure fueling system. This system gives the aircraft a faster operational turnaround time.

Pressure fueling on an aircraft is usually done from a single point. Fuel from this point is supplied to the various wing and fuselage tanks. In some cases, the drop tanks and flight refueling package may be refueled from this point.

The pressure-fueling station on the aircraft has a pressure-fueling and defueling receptacle and an electrical control panel (fig. 5-5). The pressure-fueling receptacle is standard on all aircraft that use the pressure-fueling method. However, the electrical panel and controls differ from one aircraft to another, depending upon the complexity of the fuel system. The general and servicing section of the applicable

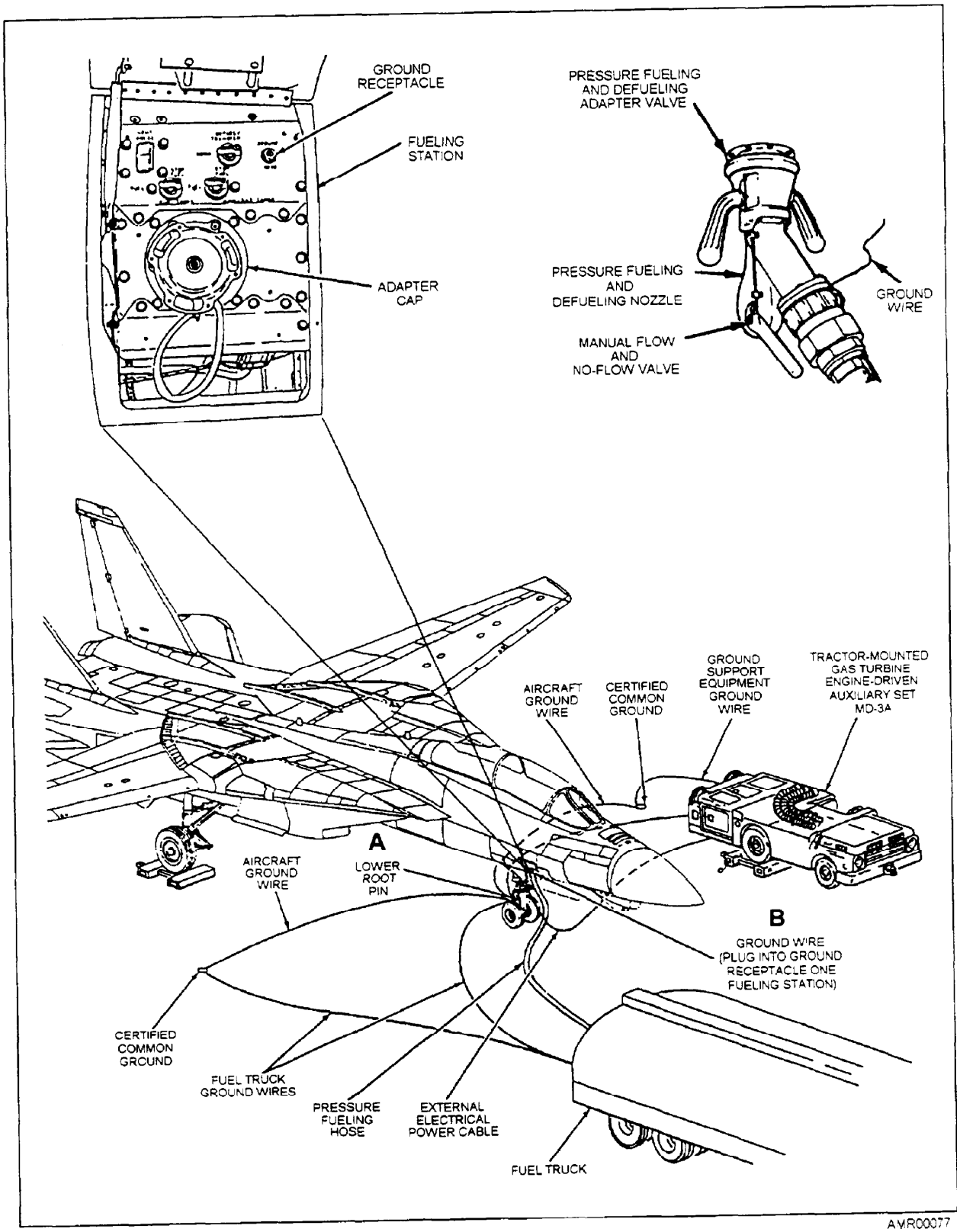

Figure 5-5.—Pressure fueling.

maintenance instruction manual (MIM) contains illustrations of and instructions for the pressure fueling system.

The pressure nozzle shown in figure 5-5 is permanently attached to the fuel hose. The pressure nozzle has a ground wire, which is used to drain off any static electricity that has built up in the nozzle. Once the nozzle is attached to the aircraft, however, it acts as a ground.

When the pressure nozzle is connected to the aircraft, it opens a spring-loaded valve within the inlet to the fuel tanks. Aircraft that use this system have automatic equipment for shutting off the fuel flow when the tanks are full.

Because the controls differ from one aircraft to another, you should always check the applicable MIM before pressure fueling an aircraft. The general procedures for pressure fueling are as follows:

1. Remove the pressure-fueling receptacle safety cap by turning it counterclockwise. Pull the pressure-fueling nozzle dust cover up and to one side of the outer shell.

2. Ground the nozzle by inserting the grounding plug into its receptacle on the aircraft.

3. Visually inspect aircraft adapter for any damage or significant wear. (A worn or broken adapter will allow the poppet valve to open and spray or spill fuel.)

4. Lift the nozzle by its handles into position. Engage the lower slot over the lower lug on the fueling receptacle. Tip the nozzle so that the upper slots engage the upper lugs. Press the nozzle in firmly so that all three nozzle lock keys are depressed. Lock the nozzle by rotating the lifting handles clockwise.

5. Set the refueling panel switches in the proper position, and apply electrical power to the aircraft.

6. Position the vent monitors, as necessary, according to the applicable MIM.

NOTE: The vent monitors are assigned to the various fuel system vents to ensure that the aircraft's fuel cells are venting properly. If the cells are not vented properly, there is the possibility that the cell will rupture and cause major structural damage.

7. When the nozzle is locked in place, the opening handle is free to turn when fueling is started. Turn the handle to the FULL OPEN position to start fueling. Rotating the opening handle more than 180° opens the poppet valve in the nozzle and locks it in the OPEN position. Position the appropriate switch on the fuel panel to the FUEL position. The fuel should shut off automatically when the ceils are full.

> **CAUTION**
>
> During pressure fueling, the fuel system should be inspected carefully for leakage. If any leaks are apparent, fueling should be stopped and corrective action taken. A fuel leak may cause injury or death to personnel.

8. When the fueling operation is complete, remove the pressure nozzle by rotating the lifting handles counterclockwise until the nozzle is unlocked from the fueling receptacle. Pull the dust cover up over the nozzle face immediately. Then replace the safety cap on the aircraft receptacle.

You must take every safety precaution to make sure that no dirt or foreign matter enters the nozzle. The nozzle nose should be completely clean before it is connected to the aircraft. The dust cover must always be kept on the nozzle except when actually fueling an aircraft.

The pressure fueling nozzle can be damaged by careless handling. Do not drop the nozzle or allow it to swing heavily against structures or equipment during handling. **Never drag the nozzle on the deck.**

The operating action of the nozzle should never be forced. If the unit does not couple freely or open or close readily, locate and correct the misalignment or mechanical jam.

Defueling

Defueling may be necessary for many reasons, some of which are fuel cell repairs, removal of external fuel tanks, failure of fuel system components, and changing fuel loads. Aircraft that use pressure fueling are normally defueled from the pressure fueling adapter. This allows the entire system to be defueled from a single point. Some older aircraft have one or more defueling valves. Some residual fuel will often be left in the bottom of the fuel cell following defueling. Usually, residual fuel can be emptied or drained through the fuel cell water drain valves. A special adapter and appropriate container are used to catch the fuel. When external fuel tanks are defueled,

it maybe necessary to insert the defueling hose in the filler port.

Normally, defueling operations are done outside the hangar and under controlled conditions. These conditions are specified in the general information and servicing volume of the applicable MIM. When it is absolutely necessary to defuel an aircraft in the hangar, the doors should be open to provide ventilation through the hangar. All shop doors leading into the hangar should be closed. No work should be done on or around the aircraft during the defueling operation. All sources of ignition should be prohibited in the area.

Additional information on fueling and defueling aircraft can be found in the appropriate aircraft MIMs and the *Aircraft Refueling NATOPS Manual,* NAVAIR 00-80T-109.

Q8. Why is wind direction an important consideration in fueling operations.

Q9. Refueling crews consist of a minimum of how many people?

Q10. Before beginning refueling operations, what is the first thing the refueling crew should do?

Q11. What is the advantage of pressure fueling over gravity fueling?

Q12. What manuals provide detailed fueling information for a specific aircraft?

OIL REPLENISHMENT

Aircraft engine oils are identified by either their military specification number (such as MIL-L-23699) or a four-digit number (such as 2085). The four-digit numbering system identifies the intended use and the viscosity of the oil. The first digit designates the intended use of the oil. The last three digits indicate the viscosity. For example, in the oil number 2085, the 2xxx series is for aircraft engine lubrication, and the 085 identifies the oil as having a viscosity rating of 85. Viscosity is defined as the internal fluid resistance to flow caused by molecular attraction.

NOTE: Both the Navy and the Air Force use the Saybolt scale for determining viscosity. Saybolt viscosity numbers should not be confused with Society of Automotive Engineers (SAE) numbers that you see on automotive oil containers.

The synthetic oils used in most turbojet engines are referred to by their military specification number, such as MIL-L-23699.

Some aircraft engines use a combination of dry and wet sump-type lubrication systems. Others are lubricated entirely with a dry sump type. Wet sump engines store the lubricating oil in the engine proper (an automobile engine is an example of a wet sump engine), while dry sump engines use an external tank mounted on or near the engine. Oil in jet engines serves the two-fold purpose of lubricating and cooling.

Servicing of the engine oil system is usually a simple task. It involves checking the tank for the proper oil level and bringing the oil level up to the required amount. On aircraft that have a dry sump system, servicing may consist of pumping uncontaminated oil directly into the supply tank. However, on some aircraft the tank is located in an inaccessible compartment, and a pressure tank is required to fill the oil tank. For specific servicing instructions of the engine oil system, refer to the applicable MIM.

HYDRAULIC FLUID REPLENISHMENT

Aircraft hydraulic fluids are identified by their military specification number. Hydraulic fluid, MIL-H-83282, is now being used in the hydraulic systems of all naval aircraft. This fluid is also used in the shock struts, shimmy dampers, and brake systems. MIL-H-83282 hydraulic fluid is colored red. It is available in 1-quart, 1-gallon, 5-gallon, and 55-gallon containers, and 16-ounce spray cans. The spray can is normally used to spray the exposed portions of oleos (the shiny part) of actuating cylinders and struts, as required during most daily inspections of aircraft.

NOTE: Hydraulic fluid MIL-H-46170 is a preservative type of hydraulic fluid used in the preservation of hydraulic systems and components. While it is red in color and considered compatible with MIL-H-83282 hydraulic fluid, it should NOT be used to service aircraft hydraulic systems.

Naval aircraft hydraulic systems are serviced by checking the fluid level (on a sight gauge usually located on the side of the reservoir) and filling the system to the prescribed level. Before fluid is added to this type of reservoir, the reservoir instruction plate should always be checked for the proper filling instructions. The instruction plate is attached to either the reservoir or to the aircraft structure near the filler opening of the reservoir. The instruction plate contains the following information:

- Total capacity of the system

- Reservoir capacity
- Refill level
- Specification and color of fluid
- Correct position of all actuating cylinders during filling
- Other information considered necessary during the filling of the reservoir

NOTE: After opening a can of hydraulic fluid, the entire contents should be poured into the fill stand or servicing unit immediately. This will prevent the fluid from absorbing dust and grit from the air. *Aviation Hydraulics Manual,* NAVAIR 01-1A-l7, requires that any remaining fluid left in the hydraulic fluid container, after servicing a fill stand/servicing unit, be discarded, and that the empty fluid container be destroyed immediately and not used to store or handle other fluids.

Q13. Define viscosity.

Q14. What scale is used by both the Navy and the Air Force to determine oil viscosity?

Q15. What is the military specification number for the hydraulic fluid presently used in the hydraulic systems of all naval aircraft?

Q16. What should be done with the fluid remaining in the can after filling a servicing unit?

PNEUMATIC SERVICING

Landing gear struts, hydraulic accumulators, and various air storage bottles found on most naval aircraft must be serviced with compressed air or nitrogen. These components are serviced by Aviation Structural Mechanics (AMs). You should refer to the applicable training manuals and technical manuals for in-depth discussions of the servicing of rate-peculiar components.

Servicing Air Storage Bottles

Nitrogen and air storage bottles are used on some aircraft for various emergency operations. These bottles are necessary for the safe operation of the aircraft and the safety of the crew. Air storage bottles are used for such functions as emergency brakes, emergency landing gear extension, and emergency canopy operation. Some aircraft have a pneumatic system that will maintain the required pressure in these bottles while in flight. However, most of these pneumatic systems require servicing on the ground with an external source of high-pressure air or nitrogen before each flight.

Air storage bottles and accumulators are serviced similarly. Most air bottles have an air filler valve and a pressure gauge. They usually require higher servicing pressures than accumulators. A high-pressure compressor and other special equipment, such as the nitrogen booster, must be used to obtain these higher pressures.

Inflation of Tires

For aircraft tires to perform satisfactorily, the correct air pressure must be maintained. Aircraft tires must be inflated to the pressure specified for the type of operation (ashore or afloat) that the aircraft is performing and for the gross weight of the aircraft. Air pressure must be checked daily with an accurate gauge. Tire inflation data is usually attached to the aircraft, as shown in figure 5-6. When the aircraft does not have this plate, you can find the information in the general information and servicing section of the applicable MIM.

Overinflation or underinflation of aircraft tires causes specific problems. Overinflation reduces the

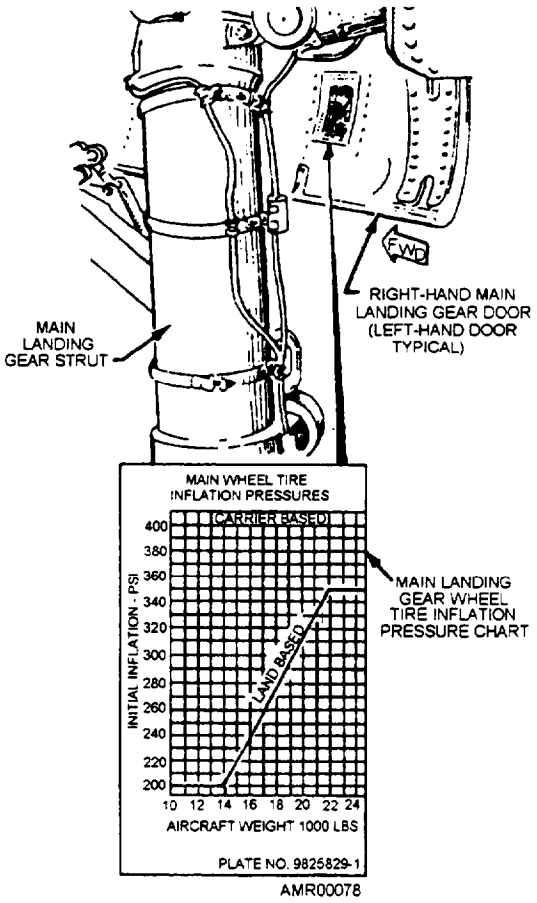

Figure 5-6.—Tire inflation chart.

contact area of the tire, causing it to wear faster at the tread center. Failure due to carcass ruptures and breaks in the tire cords that result from contact with foreign objects are usually caused by overinflation. Underinflation increases the contact area and causes the tire to wear rapidly and unevenly at the outer edges of the tread. An underinflated tire flexes excessively and develops high temperatures that weaken tire cords. An underinflated tire also may slip on the wheel during landing and shear off the valve stem.

To determine the proper inflation pressure, you should check an inflation chart like the one shown in figure 5-6. If the gross weight of an aircraft is 20,000 pounds, the correct tire pressure for that aircraft when shore based is 310 psi. If the aircraft is carrier based, the pressure is maintained at 350 psi, regardless of the gross weight. When aircraft tire pressure is low, you should add air from a regulated source.

CAUTION

An unregulated, high-pressure air source for tire inflation is a hazard. Tire inflation source pressure should be carefully monitored. If high-pressure cylinders (such as the portable air bottle or the air or nitrogen servicing trailer) are used, a regulator must be used to prevent inadvertent overinflation.

Maintenance personnel must always use a remote inflator unit when inflating tires. The operator of this unit should always stand at right angles to the landing gear axle, directly in front or in the rear of the tire. The operator should also stand at the full length of the inflator unit hose. This will prevent the operator from being struck by pieces of the wheel if it were to fail

CAUTION

When an aircraft wheel is to be removed from the aircraft, maintenance personnel must deflate the tire before removing the wheel assembly from the aircraft. This precaution is necessary because of the possibility that the bolts in split-type wheels might have been sheared during landing, causing the wheel halves to separate when the axle nut is removed. Personnel have been killed because they failed to remove the air from the tire before removing the axle nut.

Oxygen Servicing

Plane captains are responsible for making sure that the liquid oxygen systems of the aircraft are serviced. Personnel in the Aviation Structural Mechanic, Safety Equipment, (AME) rating refill these converters.

A typical liquid oxygen converter is shown in figure 5-7. Liquid oxygen is dangerous to handle and requires special handling procedures. These special handling procedures are discussed later in this chapter.

SERVICING EQUIPMENT

The following text discusses the equipment used to service aircraft, such as the high pressure air valve, servicing trailers, preoiler hand pumps, and fluid service unit HSU-1.

High-Pressure Air Valve

The high-pressure air valve is used to service struts, accumulators, air storage bottles, and other components serviced with high-pressure air. The high-pressure air valve, shown in figure 5-8, is used on most naval aircraft. It is referred to by its military specification (MS) number MS 28889-1. Air valve MS 28889-1 does not have a valve core.

When servicing a system equipped with a high-pressure air valve, you should exercise extreme

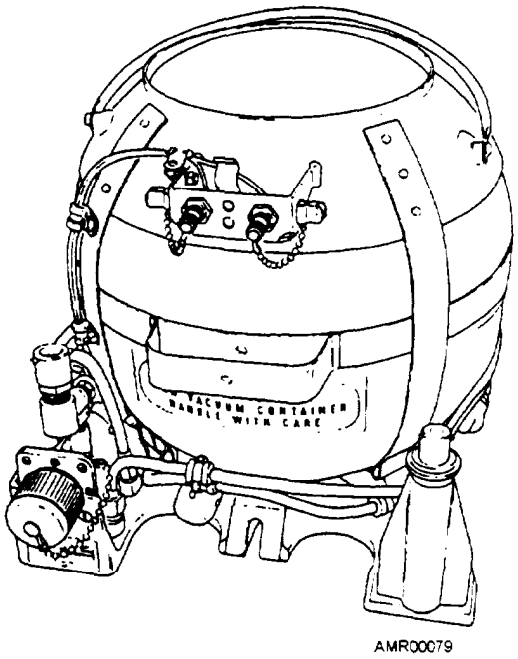

Figure 5-7.—Typical liquid oxygen converter.

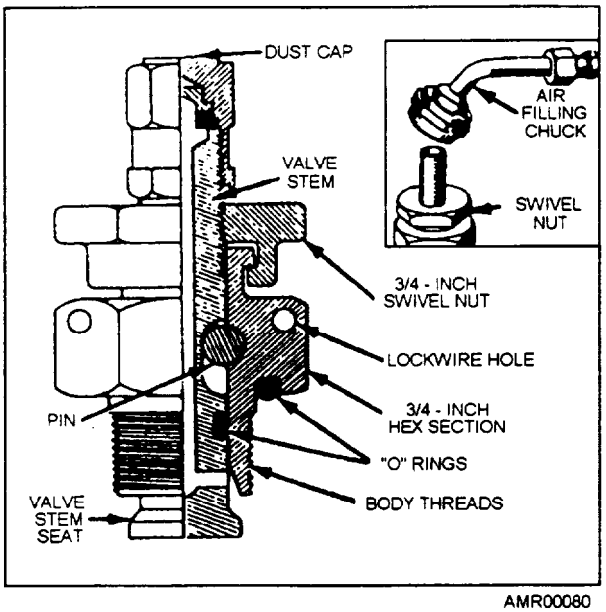

Figure 5-8.—High-pressure air valve, MS 28889-1.

caution. To release the air pressure from a system equipped with a high-pressure air valve, you should remove the dust cap from the valve and release the pressure by slowly turning the swivel nut counterclockwise.

NOTE: Dust covers are not used in most operating squadrons because they are a foreign object damage (FOD) hazard.

> **CAUTION**
>
> When loosening the swivel nut, you should make sure that the hex body nut is either lockwired in place or held tight with a wrench. If it were to be loosened before the air pressure is relieved, serious injury to personnel may result.

Low pressure indicates a leak in the system. This leak must be found and corrected. When a leaking, high-pressure air valve must be replaced, a new packing must be installed with the replacement air valve assembly. Ensure the required torque, as required by the MIM, is applied to the hex body. After the hex body is torqued, it is lockwired to the component or surrounding structure, as specified in the MIM, by using the holes provided in the hex body nut.

When the correct pressure has been reached in the system that is being serviced, you should secure the air valve by tightening the swivel nut in a clockwise direction. Once again, torque the swivel nut to the required torque listed in the MIM.

After using the high-pressure air valve, you should secure the pressure source, remove the air/nitrogen pressure charging chuck, and replace the valve cap. Install the valve cap fingertight.

Air or Nitrogen Servicing Trailer

A servicing trailer, similar to the one in figure 5-9, is found at most naval air activities for servicing aircraft hydraulic and pneumatic systems. This trailer carries six air or nitrogen storage cylinders and the necessary flow-controlling mechanisms. The trailer has a 30-foot hose stowed in a box that is mounted between the top two bottles.

The air or nitrogen servicing trailer has a purifier (dehydrator) assembly. This purifier assembly is essentially a reservoir that contains a chemical drying agent. The chemical drier removes moisture that may have adhered to the valves or have been accidentally introduced into the system. The chemical is contained in a metal cartridge or can, which is changed periodically. The gas passes through the drier just before it enters the servicing hose. The trailer has a set of manifold control valves and two regulator valves. The bottle on the air or nitrogen servicing trailer may be recharged by using a high-pressure compressor.

NOTE: When recharging the cylinders on the air or nitrogen servicing trailer, you should ensure that the cylinder pressure does not exceed the pressure specified for the equipment being recharged.

When operating the servicing trailer, you should observe the following safety precautions.

- When a system or component is being charged, only a qualified licensed operator should operate the trailer. Complete familiarity with the trailer is a basic prerequisite to ensure safe operating techniques.
- The servicing hose end and installation connection fitting should be thoroughly inspected before servicing, and any particles of foreign material removed.
- Never charge a system or component without the proper fusible safety plug and blowout disc in the trailer charging system.

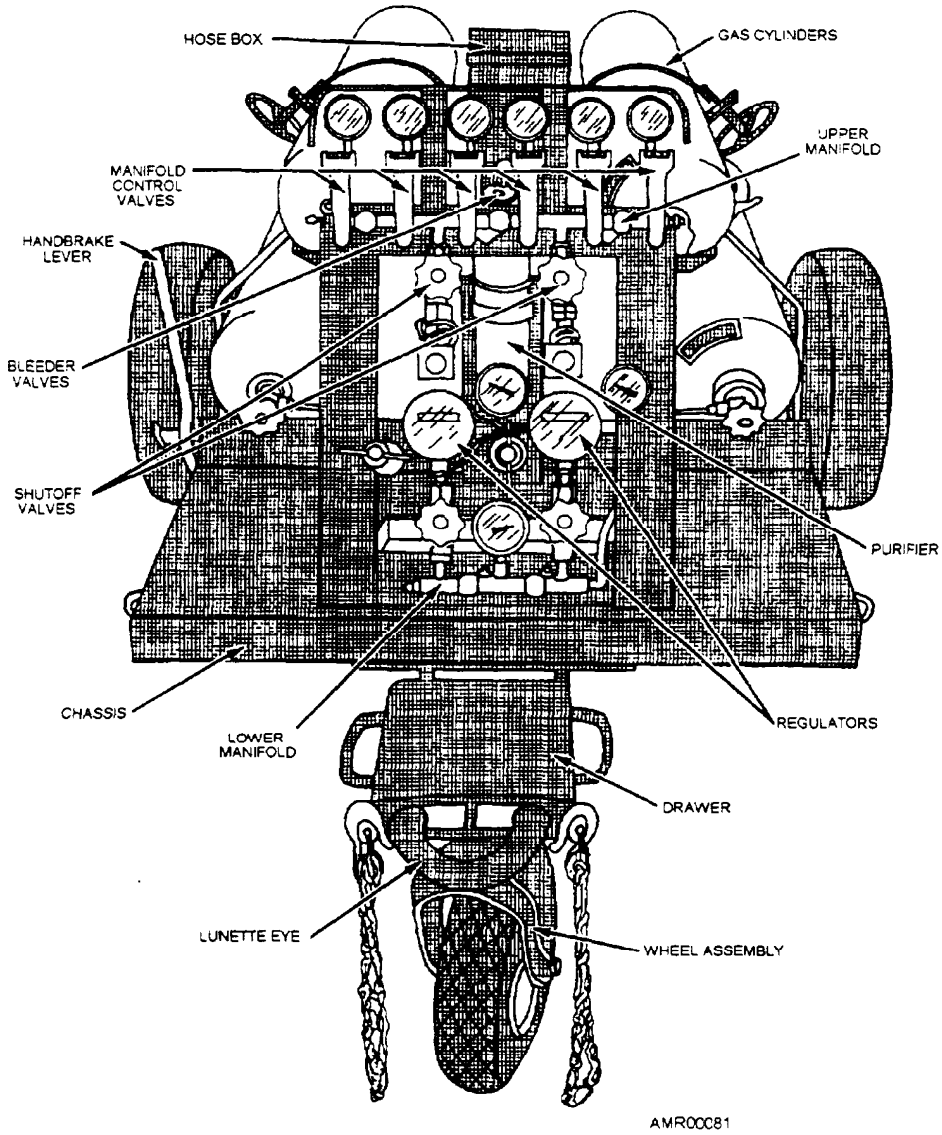

Figure 5-9.—Air or nitrogen servicing trailer.

- Always know the pressure existing in the system to be filled and the pressures in all the cylinders to be used up in the cascading process before beginning a charging operation.
- A malfunctioning pressure regulator should be disconnected from the line, closing its associated shutoff valve. The trailer can then be operated with the remaining regulator.
- The charging hose must never be stretched to reach a connection. Position the trailer so the hose is not under tension while servicing an aircraft.
- After servicing an aircraft system, stow the servicing hose in its container to ensure that it is not damaged by dragging along behind the trailer.

Preoiler (PON-6)

The preoiler (PON-6) is a portable, hand-carried, hand pump with a 3-gallon capacity. Figure 5-10 shows the major components of the PON-6. It will deliver oil at a pressure up to 100 psi. A sight glass (not shown in fig. 5-10) is located on the side of the reservoir and shows the level of the oil. An oil pressure gauge indicates oil line pressure. An oil meter records the amount of oil delivered. The meter is calibrated in ounces (outer scale) and quarts (inner scale). A push-button bleed valve relieves pressure on the meter and service hose and bleeds oil back to the reservoir. The service hose is 6 feet long. A complete drain bottle assembly is provided for overflow oil from the aircraft

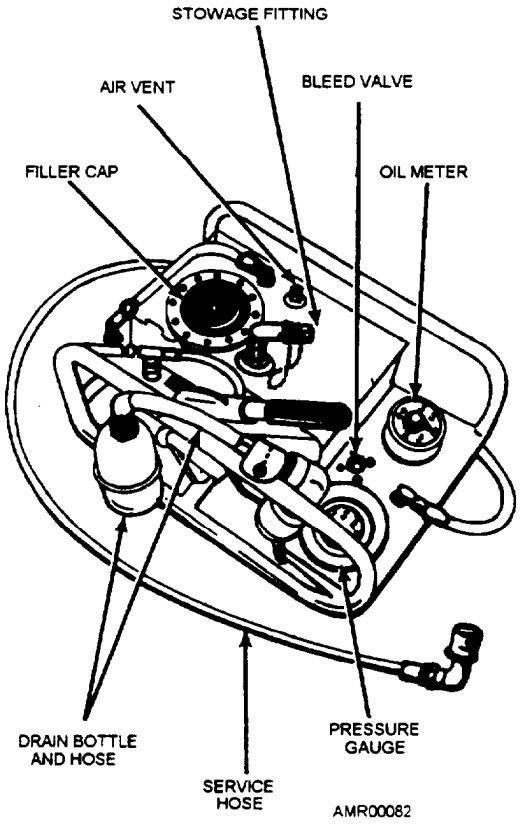

Figure 5-10.—Preoiler PON-6.

system. All components are rigidly mounted in a steel tubular framework.

Fluid Service Unit Model HSU-1

The hydraulic fluid service unit, Model HSU-1, is shown in figure 5-11. It has a fluid-holding capacity of 3 gallons. This unit accepts a standard l-gallon container, and it contains an integral 2-gallon reservoir assembly. The HSU-1 has a replaceable, 3-micron, disposable filter incorporated to ensure delivery of contamination-free fluid.

The 2-gallon reservoir assembly (along with a hand pump assembly) is mounted to a cast aluminum base. The lower can piercer is mounted on top of the reservoir and allows fluid to flow from the installed l-gallon container into the reservoir, automatically replenishing it. A sight gauge indicates the fluid level of the reservoir. It reads from 0 to 2 gallons in l/4-gallon increments. An indicated level of 2 gallons or less means that the l-gallon container is empty and can be removed for replacement. A capped deaeration port is located on top of the reservoir to permit bleeding the air from the pump and output hose.

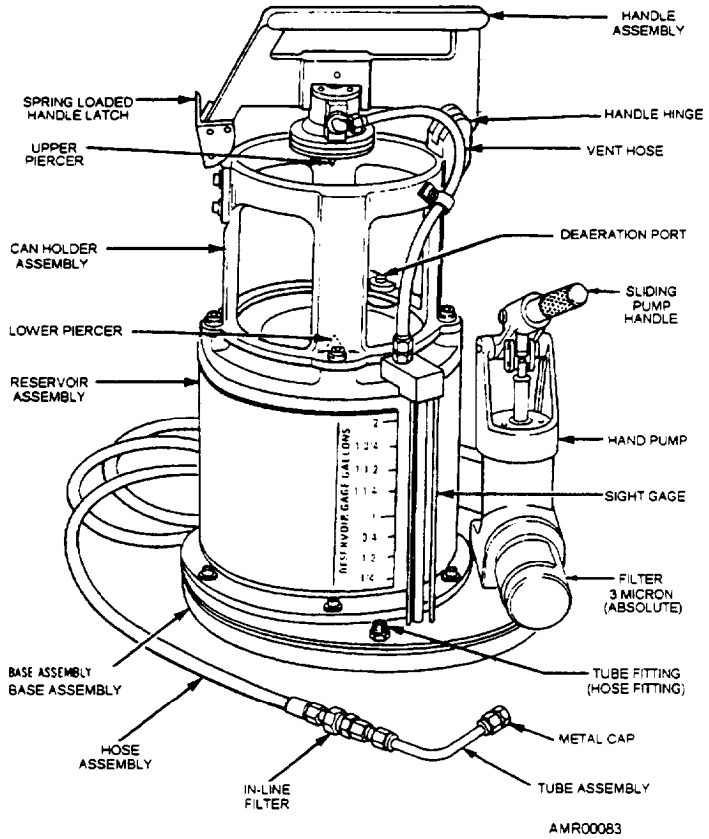

Figure 5-11.—Fluid service unit, Model HSU-1.

The can-holder and handle assemblies are mounted above the 2-gallon reservoir. The can holder positions the installed l-gallon fluid container directly above the reservoir. Also, it provides a means of placing the handle assembly over the container top. The handle assembly is hinged to a bracket on the can-holder assembly. It has a spring-loaded latch to lock the handle in the closed position. In addition to the carrying handle, the handle assembly contains an upper can piercer, a vent check valve, and a filter. A vent hose is connected between the top of the reservoir (sight gauge) and the upper can piercer.

Fluid is delivered by a hand pump. The pump can deliver 1.5 fluid ounces per full stroke at 0 to 250 psi. The pump is operated with a sliding pump handle, which is held in the extended or retracted position by a spring-loaded ball detent. The 3-micron filter on the pump base removes particulate contamination from the hydraulic fluid being delivered to the suction side of the pump. The filter unseats a shutoff valve, which closes the suction port when the filter element is being replaced.

The HSU-1 service unit has a 7-foot service hose connected to the unit's fluid output port at the pump assembly. The hose assembly ends with a short bent-tube assembly for direct connection to fill fittings on the aircraft or components being serviced. A 3-micron, in-line filter located between the hose end and the tube prevents reverse-flow contamination and serves as a final filter. When the fluid service unit is not in use, it is stored by wrapping the hose assembly around the can-holder assembly and fastening the tube end to the hose storage fitting on the base. This keeps contaminants from entering the hose while the unit is not in use.

Q17. *The air pressure in aircraft tires must be checked how often?*

Q18. *Why is it important for the operator of the remote inflator unit to stand directly fore or aft of the tire being inflated?*

Q19. *Why must a tire be deflated prior to removing a wheel assembly from an aircraft?*

Q20. *Liquid oxygen converters are refilled by personnel from what rating?*

Q21. *The high-pressure air valve, shown in figure 5-8. is used on most naval aircraft for what purpose?*

Q22. *What purpose does the purifier serve on the nitrogen servicing trailer?*

Q23. *What is the holding capacity of the fluid servicing unit (HSU-1)?*

SAFETY

LEARNING OBJECTIVE: Identify safety precautions used when working around aircraft on the flight line and aboard ship.

Safety is the responsibility of everyone in the Navy. You are responsible for your own safety, and, as a sailor, you have the moral responsibility for the safety of your shipmates. As a plane captain, you will be exposed to dangerous situations. In fact, many insurance companies rate flight line operations and, in particular, the flight deck environment among the most dangerous jobs in the world. The following text will introduce you to some of the many hazards of your work area.

LINE SAFETY PRECAUTIONS

In addition to the more specific safety precautions presented in various sections of this chapter, there are a number of miscellaneous precautions that you must observe when working on the aircraft flight line and the carrier flight deck. The following precautions are of special importance to ensure your safety as well as the safety of your coworkers.

Propellers and Rotors

When working on the line around propeller-driven aircraft or helicopter rotors, the first general precaution that you must observe is to BEWARE OF PROPELLERS. When you see a propeller, let it be a constant reminder to STAY CLEAR! In general, do not cross in front of moving propellers because they are not easily seen. A good habit is to always walk around propellers. Unless you are inspecting or performing maintenance on the propeller blades, NEVER walk through a prop arc, even when it is not operating. The area around the aircraft must be kept clear of loose gear and debris.

Intake Ducts

Maintenance of jet engines presents major hazards. The air intake duct of operating jet engines represents an ever-present hazard to personnel working near the inlet duct of the aircraft. It can also be a hazard to the engine itself if the turnup area around the front of the aircraft is not kept clear of debris. Jet

engines will "eat" anything and they have no respect for life or limb. This hazard is greatest during maximum power settings (high-power turnup).

The air inlet duct may develop enough suction to pull hats, eyeglasses, loose clothing, and rags from pockets. Secure or remove all loose articles before working around operating jet engines. In some engines, the suction is strong enough to pull a person up to or, in some cases, into the inlet and pull the eyeballs from their sockets. Keep clear of the intakes.

Protective screens (fig. 5-12) are supplied as part of the ground handling equipment for most jet aircraft. These screens should be installed before all maintenance turnup. Turnup screens protect both personnel and engines. It does NOT eliminate the need for caution; serious injury can still result by being

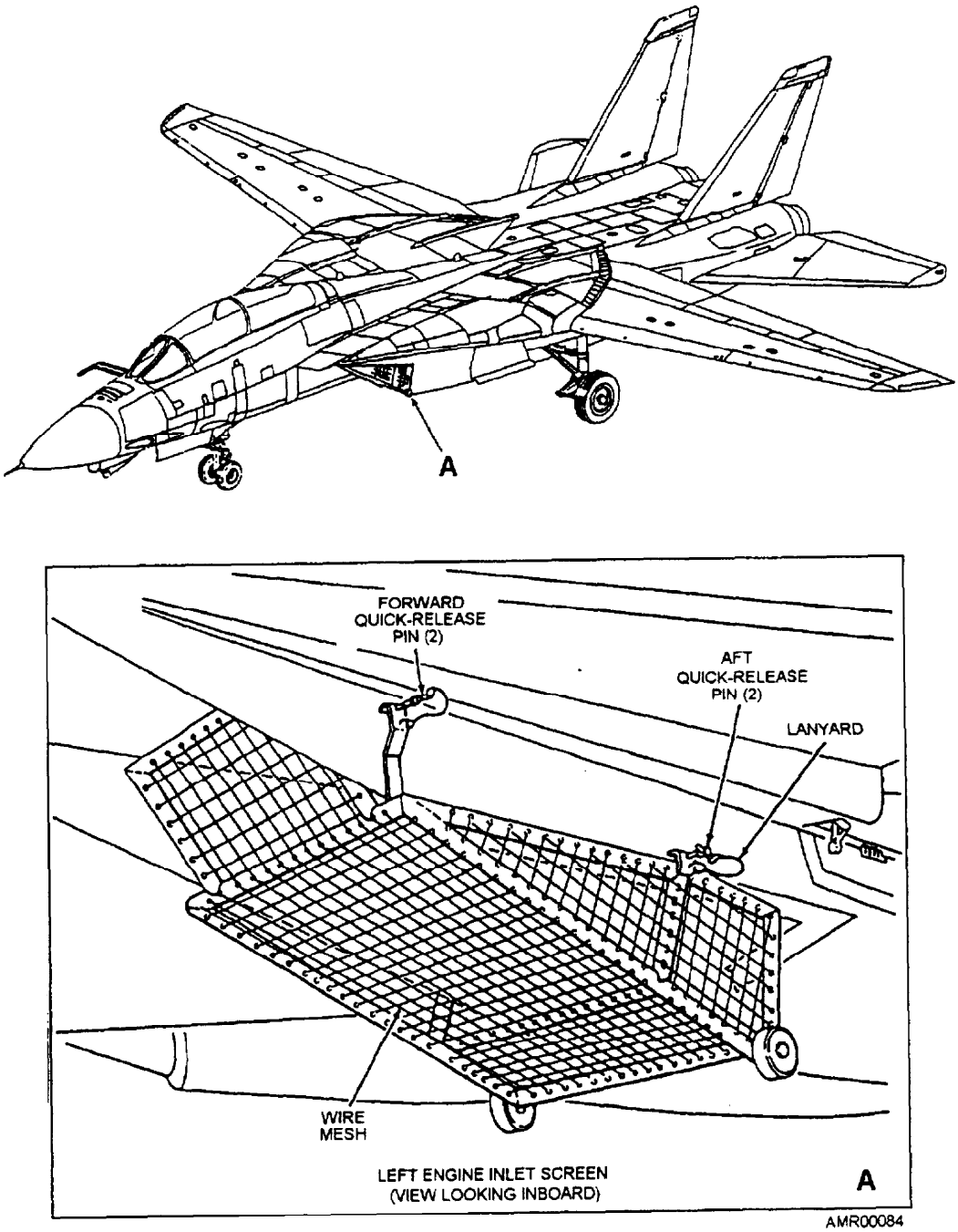

Figure 5-12.—Engine inlet protective screen.

pulled against the screen, and small items can be pulled through the *screen.* This results in thousands of dollars of damage to the engine.

Exhaust Area Hazards

Jet engine exhaust also creates hazards. Tests show that while the carbon monoxide content of jet exhaust is low, other gases are present that irritate the eyes. Less noticeable, but as important, is the respiratory irritation that may be caused by exhaust fumes.

The two major hazards of jet engine exhaust are the high temperature and high velocity of the exhaust gases from the tailpipe. High temperatures are found up to several hundred feet from the tailpipe, depending on wind conditions. Closer to the aircraft, temperatures are high enough to damage asphalt pavement. The blast from the exhaust is strong enough to knock a person down at close distances and can even blow a body off of the flight deck overboard. Do not take the signs lightly. BEWARE OF JET BLAST.

When a jet engine is started, excess fuel accumulates in the tailpipe. When the fuel ignites, long flames can be blown out of the tailpipe. All flight line personnel should be aware of this hazard, and all flammable materials should be kept clear of the danger area.

During maximum power settings, the high velocity of the exhaust gases may pick up and blow loose dirt, sizable rocks, sand, and debris several hundred feet. This is an eye and FOD hazard. Therefore, you should use caution when parking an aircraft for run-up. The general information section of the applicable MIM contains information concerning the exhaust area hazards. These instructions should be strictly followed. **No one should foolishly experiment with the specified safety margins.**

After engine operation, no work should be done to the exhaust section for AT LEAST ONE-HALF HOUR (preferably longer). If work is necessary immediately, you must wear leather gloves.

Engine Noise

Jet engines produce noise capable of causing temporary as well as permanent loss of high-frequency hearing. When working around jet engines, you should take the following precautions to protect your hearing:

- Wear the proper ear protection (ear plugs or sound attenuators and sometimes both).
- Do not exceed the time limits on exposure to the various sound intensities.
- Have periodic checks on your hearing ability.

Engine noise is broadcast from the aircraft in patterns, which vary in direction, distance, and intensity with engine speed. The most intense sound areas are in the shape of two lobes extending out and aft from the aircraft center line. However, dangerous intensities are also present to the side and forward of the aircraft. (See fig. 5-13) This information is found in the applicable Naval Air Training and Operating Procedures Standardization (NATOPS) manual.

Damage to hearing occurs when the ear is exposed to high sound intensities for excessive periods. The higher the sound intensity, the shorter the period of exposure that will produce damage. Above 140 decibel (dB) sound intensity, any exposure without ear protection can cause damage.

NOTE: Sound intensity is measured in decibels (dB). A dB is a number that relates a given sound intensity to the smallest intensity that the average person can hear.

By wearing regulation earplugs or sound attenuators, you can raise the limits of time exposure. Personnel working within danger areas should be familiar with calculated noise dB levels (as specified in the applicable MIM), and should wear the necessary protective equipment.

Q24. According to many insurance companies, what is considered the most dangerous environment in the world?

Q25. When you work around aircraft with propellers, when is it safe to walk through or stand in the prop arc?

Q26. Does a protective screen over the inlet of an operating aircraft engine eliminate the possibility of serious injury?

Q27. What are the two major hazards of jet engine exhaust?

Q28. Any exposure, without ear protection, can cause hearing damage above what decibel (dB) level?

Movable Surface Hazards

Moveable surfaces, such as flight control surfaces, speed brakes, power-operated canopies, and landing gear doors, are a major hazard to flight line personnel. These units are normally operated during ground

SOUND LEVELS IN dBA		
THIS TABLE CONTAINS ESTIMATED SOUND LEVELS FOR TF30-P-414/414A AND F110-GE-400 (MIXED FLOW AUGMENTED) AFTERBURNING TURBOFAN ENGINES. SOUND LEVEL CONTOUR LETTERS A, B, C, AND D (SHOWN IN THIS ILLUSTRATION) REPRESENT A SPECIFIC dBA VALUE. WHEN dBA VALUE IS IN THIS TABLE, IT SHALL BE SUBSTITUTED IN PLACE OF CONTOUR LETTER.		
CONTOUR	MAXIMUM AFTERBURNER POWER	INTERMEDIATE POWER (MILITARY POWER)
A 1	134	123
A 2	145	140
B 1	130	119
B 2	140	135
C 1	127	116
C 2	135	132
D 1	123	112
D 2	130	130

NOTE

SOUND LEVEL CONTOURS SHOWN ARE FOR SINGLE-ENGINE PO OPERATION. CONTOURS ARE SYMMETRICAL ABOUT ENGINE CENTERLINES DURING DUAL-ENGINE OPERATION.

EAR PROTECTIVE DEVICES

UNIVERSAL FIT EARPLUG	EARPLUG V-51-R TYPE OR SIMILAR	TYPICAL EAR MUFF	FLIGHT DECK SOUND-ATTENUATING HELMET (INCLUDES EAR MUFF)

WARNING

EARPLUGS AND EAR MUFFS SHALL BE WORN TOGETHER WHEN PERFORMING ENGINE RUNUP.

IF ENGINES ARE RUN UP IN FRONT OF BLAST DEFLECTOR, EXHAUST JET WAKE AND SOUND SHALL BE DEFLECTED UP AND TO SIDES, RESULTING IN DISTORTION CONTOUR PATTERNS SHOWN.

AT MAXIMUM POWER, TF30-P-414/414A AND F110-GE-400 ENGINE AFTERBURNERS ARE AT INTERMEDIATE POWER (MILITARY POWER), THE NOZZLES ARE FULLY CLOSED (MINIMUM OPENING).

ALLOWABLE NOISE EXPOSURE SOUND LEVEL IN dBA (SLOW RESPONSE)							
TYPE EAR PROTECTIVE DEVICES	EXPOSURE TIME (HRS*)						
	1/4	1/2	1	2	4	6	8
NO PROTECTION	115	110	105	100	95	92	90
EARPLUGS WITH AVERAGE SEAL	127	122	117	112	107	104	102
EARPLUGS AND EAR MUFFS	135	130	125	120	115	112	110

* DURATION OF EXPOSURE PER DAY
REF. BUMED INST 6260.5B, 5 MARCH 1970

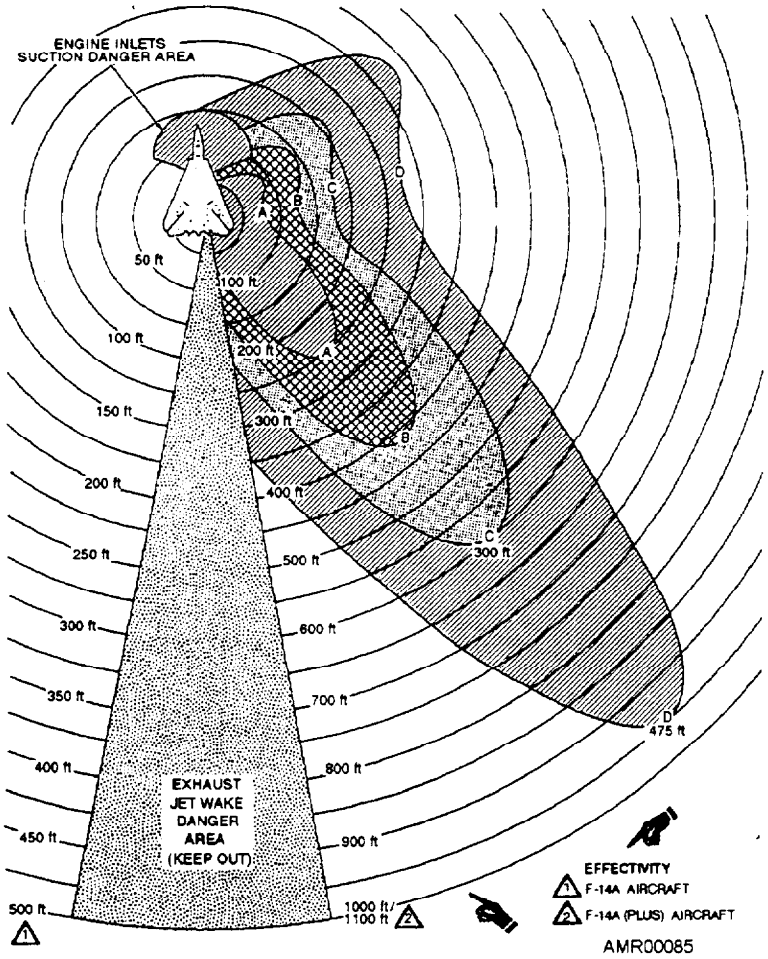

Figure 5-13.—Noise danger areas.

operations and maintenance. Therefore, you should make sure that all personnel and equipment are clear of the area before operating any movable surface.

Power-operated canopies have safety locks that must be installed during ground-handling operations. These safety locks prevent the accidental closing of the canopy, preventing personnel from being crushed as the canopy closes.

The general information and servicing section of each MIM contains specific information concerning the various movable surface hazards and specifies the safety locks that must be used. Personnel involved with line operations and maintenance should pay

particular attention to this information because some of these units move extremely fast with terrific power.

Seat Ejection Mechanisms

You must strictly observe all safety precautions when working around an aircraft equipped with an ejection seat. These safety precautions cannot be overemphasized because accidental actuation of the firing mechanism can result in death or serious injury to anyone in the cockpit area.

Each ejection seat has several ground safety pins; the exact number depends upon the type of seat. These safety pins are provided on red-flagged lanyards for use at every point of potential danger. They must be installed when the aircraft is on the ground or deck, and must never be removed until the aircraft is ready for flight.

Always keep in mind the following general precautions when you are working on or around ejection seats:

- Treat ejection seats with the same respect as a loaded gun.
- Always consider an ejection seat system loaded and armed.
- Before entering a cockpit, know where the ejection seat safety pins are and be certain they are installed.
- Only authorized personnel may work on ejection seats and components and only in an authorized area.

Overheated Wheel Brakes

If an aircraft has been subjected to excessive braking, the wheels may be heated to the point there is danger of a blowout or fire.

NOTE: Excessive brake heating weakens the tire and wheel structure, increases tire pressure, and creates the possibility of fire in magnesium wheels. When the brakes on an aircraft have been used excessively, the fire department should be notified immediately. All unnecessary personnel should leave the immediate area.

If blowout screens, such as the one shown in figure 5-14, are available, they should be placed around both

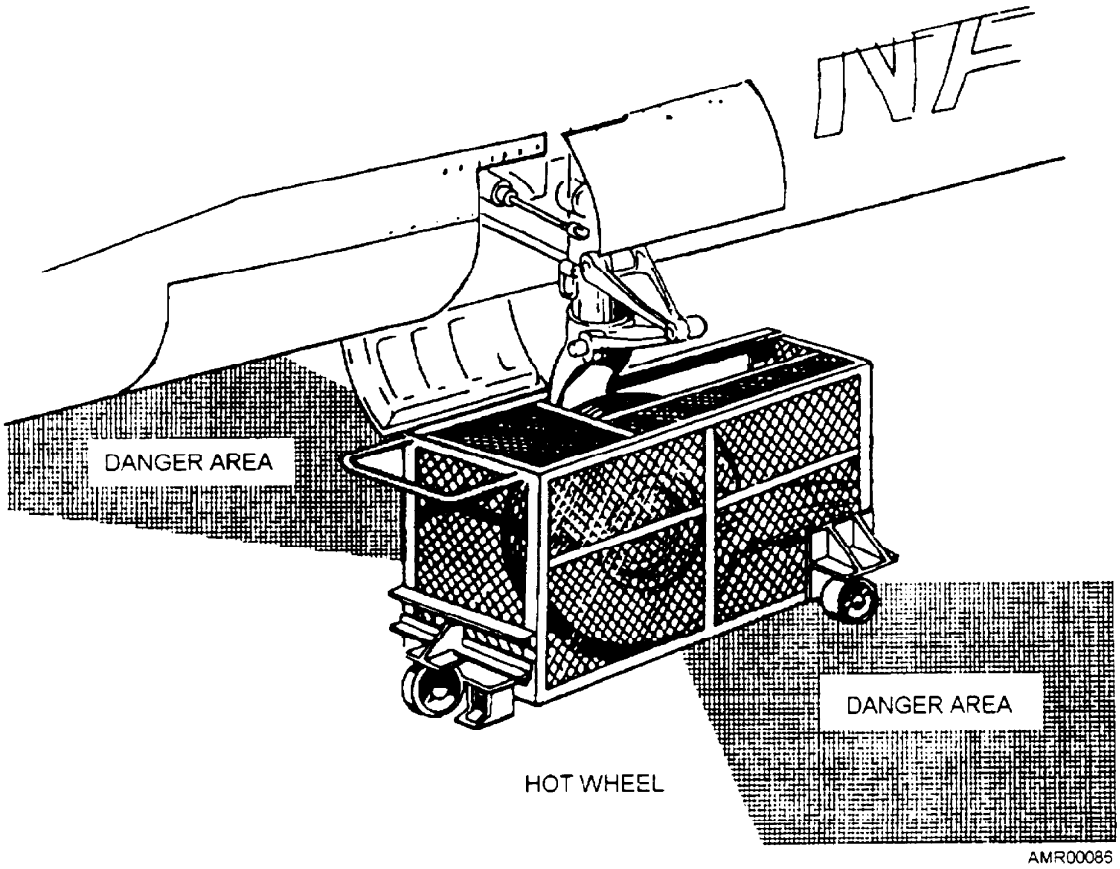

Figure 5-14.—Blowout screen for overheated brakes.

main wheels. These screens help prevent damage or injury if a blowout occurs. If the tire is flat, explosive failure of the wheel or tire will not result. However, upon sudden cooling, an overheated wheel may fracture or fly apart, which could hurl bolts or fragments through the air with sufficient speed to injure personnel.

Required personnel should approach overheated wheels with extreme caution in the fore or aft directions—never in line with the axle.

NOTE: The area on both sides of the tire and wheel, in line with the axle, is where the fragments would be hurled if the tire were to explode. Therefore, it is called the danger area (fig. 5-14).

Heat transfer to the wheel will continue until the brake is cooled. Therefore, the danger of explosive failure may exist after the aircraft is secured if the overheated brake is not cooled. The recommended procedure for cooling overheated wheel, brake, and tire assemblies is to park the aircraft in an isolated location. Then, allow the assembly to cool in ambient air for 45 to 60 minutes. Cooling agents should not be used to accelerate cooling unless operational necessity dictates their use. If such an operational necessity were to occur, the cooling should be supervised by someone in the AM rating.

WARNING

Never use CO_2 to cool overheated brakes. A violent explosion can occur.

Liquid Oxygen (LOX)

When working with or around liquid oxygen, you must take the following safety precautions:

- Do not operate liquid oxygen equipment unless you are qualified, licensed, or working under the supervision of qualified personnel.
- Do not permit smoking, open flames, or sparks in the liquid oxygen handling areas.
- Do not carry matches in liquid oxygen handling areas.
- Always call oxygen by its proper name. Do not confuse it with compressed air. Never use oxygen in place of compressed air for any purpose.
- Handle converters, storage tanks, and transfer equipment with care to avoid damage to the insulating space.
- Keep work areas and equipment free from oil, grease, or any other combustible material.
- Keep tools and clothing free from oil and grease.
- Avoid spilling liquid oxygen on the floor or deck areas. In case of accidental spillage, ventilate the area thoroughly.
- If the body comes into contact with liquid oxygen or there is reason to suspect some part of the body has been frozen or chilled, thaw the exposed area, preferably by immersion or by bathing it in water that is slightly above normal body temperature. Then wrap the exposed area loosely with a clean, dry dressing. Report to a doctor immediately. Do not apply anything else to the affected area other than a clean, dry dressing.

CAUTION

Liquid oxygen can explode when it comes into contact with oil or grease.

LOX Protective Clothing

Protective clothing allows you to work safely with LOX. Wear clothing in the following ways:

- Wear goggles or safety glasses with side shields or a face shield when handling LOX.
- If LOX is spilled on clothing, remove the clothing immediately and air it promptly. In general, wear all clothing so that, if there were spillage, the liquid would roll off the clothing and not become trapped in gloves, shoes, or pockets. Other items of protective clothing are plastic or rubberized fabric aprons, high-top shoes or rubber boots, and cuffless trousers worn outside the shoe tops. The clothing should not have pockets, and sleeves and trousers should not be rolled up.
- Do not handle with your bare hands any tubing or fittings through which LOX is flowing. Wear clean, dry gloves when handling parts of equipment cooled by LOX. Use loose-fitting leather gloves so they can be thrown off quickly if any of the LOX gets into them.

FLIGHT DECK SAFETY

The flight deck of an aircraft carrier is a very busy and dangerous place during launching, recovery, and respotting of aircraft. Plane captains and other maintenance personnel assigned specific duties associated with the flight deck must be constantly aware of the dangerous environment in which they work.

You should receive predeployment training lectures on aircraft handling procedures, flight and hangar deck safety precautions, responsibilities during launch and recovery of aircraft, tie-down requirements and techniques, and special shipboard maintenance procedures and safety precautions. This training requirement is in addition to the general indoctrination given all personnel concerning flight quarters, general quarters, fire, abandon ship, man overboard, and other general drills. Also, this indoctrination covers ship conditions, smoking and safety precautions, and watchstanding requirements peculiar to shipboard operations.

Flight line safety precautions (previously discussed) apply to flight deck operations. The primary difference is the limited space and tempo of operations experienced on the flight deck, causing flight deck operations to be more dangerous.

During launch and recovery of aircraft, all personnel not required should leave the flight deck and catwalk areas. The safe parking area aft of the island is also an unauthorized space for personnel during aircraft recovery.

Personnel should not stand in or otherwise block entrances to the island structure or exits leading off the catwalks. Never turn your back on aircraft taxiing on the flight deck. Always be alert for the unexpected. There is never room for carelessness, daydreaming, or skylarking on the flight deck.

All personnel assigned flight quarters on or above the hangar deck must wear appropriate jerseys and helmets. Personnel on the flight deck during flight quarters must wear the cranial impact helmet or its equivalent, goggles, sound attenuators, flight deck shoes, flotation gear, an adequately secured whistle, and a survival light. The authorized flight quarters clothing for the different flight deck jobs is shown in figure 5-15.

Any maintenance performed on aircraft that will require wingspread/fold, respot, turnup, blade track, jacking, *or* maintenance that will prevent the aircraft from being moved must be approved through the activity's maintenance control. This is true regardless of how much or how little time is required for the work to be performed. The activity's maintenance control, before it can grant approval, must obtain permission from the aircraft handling officer by way of the air wing, group maintenance liaison officer, or his or her representative.

When an aircraft is being turned up or jacking operations are being performed, make sure that the permission of the aircraft handling officer has been received and that all ship's safety regulations are observed. Safety men, with sufficient line to block off the area, must be stationed around the aircraft.

Each ship may have safety precautions unique to that ship due to operational requirements and special circumstances. Petty officers are responsible for knowing and enforcing the safety precautions that apply to their area of work and their personnel.

Q29. What system or mechanism should you always treat with the same respect as a loaded gun?

Q30. In relation to overheated wheel brakes, what area is considered the "danger area"?

Q31. What item, if used to cool overheated brakes, is likely to cause an explosion?

Q32. Why is it important to keep tools, work areas, and clothing free from grease and oil when working around LOX?

Q33. What are the primary differences between flight line and flight deck operations?

SPECIAL PROGRAMS

LEARNING OBJECTIVE: Identify the Navy's special maintenance programs related to Naval Aviation and their purposes.

The special programs discussed in this chapter are covered in detail in the *Naval Aviation Maintenance Program,* OPNAVINST 4790.2. Until Volume V of OPNAVINST 4790.2 is issued, which covers Naval Aviation Maintenance Standard Operation Procedures (NAMSOP), a local, more convenient source of information on these special programs is your squadron maintenance instructions (MIs). Technical information and local policy are issued through MIs. MIs describe techniques that do not direct the performance of work at defined intervals but are sustaining in nature. MIs include policy, procedures, and methods of managing specific maintenance

PERSONNEL	HELMET	FLOTATION VEST	SYMBOLS, FRONT AND BACK
Aircraft handling crew and chock men	Blue	Blue	Crew number
Aircraft handling officers and plane directors	Yellow	Yellow	Billet title—crew number (note 1)
Arresting gear crew	Green	Green	A
Aviation fuels crew	Purple	Purple	F
Cargo handling personnel	White	Green	"SUPPLY"/"POSTAL" as appropriate
Catapult and arresting gear officers	Green	Yellow	Billet title
Catapult crew	Green	Green	C
Catapult/AG QA	Green	White	ALRE QA
Catapult safety observer (ICCS)	Green	(Note 4)	Billet title
Crash and salvage crews	Red	Red	Crash/Salvage
Elevator operators	White	Blue	E
Explosive ordnance disposal (EOD)	Red	Red	"EOD" in black
GSE troubleshooter	Green	Green	"GSE"
Helicopter LSE	Text	Text	Text
Helicopter plane captain	Red	Brown	H
Hook runner	Green	Green	A
Landing signal officer	None	White	LSO
Leading petty officers:			
Line	Geen	Brown	Squadron designator and "Line COP"
Maintenance	Green	Green	Squadron designator plus "Maint. COP"
Quality assurance	Brown	White	Squadron designator and "QA"
Squadron plane inspector	Green	White	Black and white checkerboard pattern and squadron designator
LOX crew	White	White	LOX
Maintenance crews	Green	Green	Black stripe and squadron designator
Medical	White	White	Red cross
Messengers and telephone talkers	White	Blue	T
Ordnance	Red	Red	3-inch black stripe and squadron designator/ships billet title
Ordnance QA	White	(Note 6)	Squadron designator and "ORDNANCE QA/SAFETY"
Photographers	Green	Green	P
Plane captains	Brown	Brown	Squadron designator
Safety	White	White	"SAFETY"

Figure 5-15.—Authorized flight quarters clothing.

PERSONNEL	HELMET	FLOTATION VEST	SYMBOLS, FRONT AND BACK
Supply VERTREP coordinator	White	Green	"SUPPLY COORDINATOR"
Tractor driver	Blue	Blue	Tractor
Tractor king	Blue	(Note 5)	TK
Transfer officer	White	White	"TRANSFER OFFICER"

1. Only personnel charged with the actual control or direction of aircraft movements on the flight or hangar deck shall wear yellow jerseys. Personnel in charge of a detail, such as aviation fuels, ordnance, and maintenance, shall wear a helmet and jersey corresponding in color to that of their respective detail and with their billet title on the jersey and flotation vest.

2. Helmets for the following personnel shall be marked with three reflective international orange stripes, one inch wide, evenly spaced, running fore and aft:

a. All air department officers.
b. Air department chief petty officers and leading petty officers.
c. EOD team members.
d. All ordnance officers and gunners.
e. Ordnance handling officer and air gunner.

3. Helmets for all other personnel shall be marked with a 6-inch square (or equivalent) of white reflective tape on the back shell and a 3-inch by 6-inch (or equivalent) of white reflective tape on the front shell. Landing signal officers are not required to wear helmets or sound attenuators when engaged in aircraft control. Helmets shall have a 2-inch piece of velcro on the left side of the front shell and velcro on the survival light.

4. New requirement for ICCS is green jersey and yellow vest.

5. Yellow jersey/blue flotation vest.

6. White jersey/red flotation vest.

Figure 5-15.—Authorized flight quarters clothing—Continued.

programs. When issued, the NAMSOP will eliminate the need for maintenance instructions at command level. NAMSOPs will standardize these programs throughout aviation maintenance. As a plane captain, you will be involved with these programs. Therefore, you must know the purpose and scope of the special programs discussed in the following text.

FOREIGN OBJECT DAMAGE (FOD) PREVENTION PROGRAM

FOD is damage to aeronautical equipment caused by objects and debris foreign to that equipment. Foreign objects are also major safety hazards to personnel if the objects are left on the flight line/flight deck to be blown around by aircraft.

The ingestion of foreign objects and debris into gas turbine engines is a problem that accounts for the largest percentage of premature engine removal. The removal of these engines consumes maintenance man-hours, imposes unscheduled workloads on supporting activities, and creates an unwarranted shortage of engines and spare engine parts in the supply system. Thus, the training capability and fleet operational readiness are drastically reduced. The majority of gas turbine engines undergoing depot rework exhibit some degree of FOD.

Most FOD is caused by poor housekeeping, facility deterioration, improper maintenance practices, and carelessness. FOD cannot be tolerated; thus, the requirement to reduce FOD is mandatory. A successful FOD prevention program depends upon command support, personnel knowledge and awareness, and its integration into the total maintenance effort.

As a plane captain, you can help prevent FOD by checking the deck for loose gear (nuts, bolts, washers, and safety wire) after maintenance is completed. Also, you should check the intakes and exhausts of your aircraft during the daily/turnaround inspection.

TOOL CONTROL PROGRAM (TCP)

The Tool Control Program (TCP) reduces the potential for tool FOD-related mishaps and keeps down the cost of tool replacement. This program gives you a fast way to account for all tools, both before and

after completing a maintenance task on an aircraft or its related equipment. The material control officer coordinates the Tool Control Program and makes sure that tools are procured and issued according to the approved tool control plan (TCPL). A TCPL contains information that includes material requirements, tool inventories, and detailed instructions for operation of the TCP for a specific type/model of aircraft.

The TCP is based upon the instant inventory concept. It provides internally configured, silhouetted tool containers. All tools have individual locations to highlight a missing tool. An inventory listing is included within each container. On containers that cannot be silhouetted, a note with the inventory and drawing of the container outline is fastened to the container. It is securely fastened so it will not become a FOD hazard. Either system lets you quickly determine that all tools have been retrieved after a maintenance action. The most significant benefit of this program is the saving of lives and equipment by eliminating tool FOD-caused accidents. Additional benefits of the Tool Control Program are listed below.

- Reduced initial outfitting and tool replacement costs
- Reduced tool pilferage
- Reduced man-hours required to complete each maintenance task
- Assurance that proper tools are available for specific maintenance tasks

METROLOGY AND CALIBRATION PROGRAM (METCAL)

Most maintenance shops are provided with a variety of calibrated support equipment that is used to maintain many different systems. This calibrated SE is used to measure, gauge, test, inspect, or otherwise examine material, supplies, and equipment to determine compliance with requirements established in technical documents. The accuracy of this equipment is vital in everyday maintenance. The METCAL program was designed to make sure that all equipment requiring calibration/servicing is maintained at maximum dependability. The recall of equipment for calibration at established intervals is assisted by the Metrology Automated System for Uniform Recall and Reporting (MEASURE). The MEASURE goal is to provide a single, uniform management information system for the Navy METCAL Program.

As a plane captain, you are responsible for checking each piece of equipment (hydraulic servicing unit, oil servicing unit, etc.) to make sure that the calibration label is valid (has the current date on it). If you find an out-of-date calibration label, the piece of equipment should not be used, and you should make an immediate report to your supervisor.

JOINT OIL ANALYSIS PROGRAM (JOAP)

The Joint Oil Analysis Program (JOAP) was designed so the oil condition of equipment can be diagnosed and monitored without removing or extensively disassembling equipment. As a plane captain, you will be directed by maintenance control through a Visual Information Display System/Maintenance Action Form (VIDS/MAF) or NALCOMIS to take an oil sample. The oil sample you take might be from a certain aircraft engine, transmission, or other aircraft component. You must be careful when taking the sample. You must be sure that you do not cause the sample to become contaminated. Additionally, you must fill out an Oil Analysis Request Form (DD Form 2026), shown in figure 5-16. After you have completed this form, the sample is sent to the appropriate oil laboratory where it is checked for contamination. If contamination is present in the sample, corrective action is taken.

HYDRAULIC CONTAMINATION CONTROL PROGRAM

Hydraulic fluid contamination is the presence of undesirable foreign matter, which may or may not be visible to the unaided eye. Typical fluid contaminants include metallic and nonmetallic debris (both self-generated and externally introduced), water, and other foreign fluids. This contamination degrades system performance and component life. The Hydraulic Contamination Control Program also includes other systems that contain fluid. Examples are the F-14 aircraft's radar liquid coolant and missile coolant systems. Also, some pieces of SE are included in this program.

Hydraulic system contamination levels are monitored by means of a fluid surveillance program. When systems fail to meet required cleanliness levels, decontamination procedures are used to restore systems to an acceptable level. The acceptable contamination levels, related maintenance doctrine, and detailed maintenance requirements are specified in the *Aviation Hydraulics Manual,* NAVAIR 01-1A-17.

TRANSIT AIRCRAFT OIL ANALYSIS RECORD

ASSIGNED OIL ANALYSIS LABORATORY	LABORATORY TELEPHONE NO. (Autovon): (commercial):	END ITEM MODEL AND SERIAL NO.
		EQUIPMENT MODEL AND SERIAL NO

LAB CODE	DATE	TOTAL TIME SINCE OVERHAUL	TOTAL TIME SINCE OIL CHG	FE	AG	AL	CR	CU	MG	NI	PB	SI	SN	TI	MO	LAB REC

SAMPLE

DATE DEPARTED *(Return this form with aircraft)*

REMARKS

OIL ANANYSIS REQUEST

		KEYPUNCH CODE
TO	OIL ANALYSIS LABORATORY	1-3
FROM	MAJOR COMMAND	4
	OPERATING ACTIVITY *(Include ZIP Code/APO/DODAAD)*	5-10
EQUIPMENT MODEL/APPLICATION		11-14
EQUIPMENT SERIAL NUMBER		15-20
END ITEM MODEL/HULL NUMBER		
END ITEM SERIAL NUMBER/END ITEM CODE		
DATE SAMPLE TAKEN *(Day, Mo., Yr.)*	LOCAL TIME SAMPLE TAKEN	21-24
HOURS/MILES SINCE OVERHAUL		25-29
HOURS/MILES SINCE OIL CHANGE		30-33
REASON FOR SAMPLE ☐ ROUTINE ☐ LAB REQUEST ☐ TEST CELL ☐ OTHER *(Specify)*		34
OIL ADDED SINCE LAST SAMPLE *(Pts. Qts. Gals)*		35-36
ACTION TAKEN ☐		
DISCREPANT ITEM		
HOW MALFUNCTIONED		
HOW FOUND ☐ LAB REQUEST ☐ AIR OR GROUND CREW		
HOW TAKEN ☐ DRAIN ☐ TUBE	SAMPLE TEMPERATURE ☐ HOT ☐ COLD / TYPE OIL	37-38
REMARKS		

SAMPLE

FOR LABORATORY USE ONLY

SAMPLE RESPONSE TIME						39-40
FE 41-43	AG 44-46	AL 47-49	CR 50-52	CU 53-55	MG 56-58	NI 59-61
PB 62-64	SI 65-67	SN 68-70	TI 71-73	MO 74-76		
LAB RECOMMENDATION						77-78
SAMPLE NO.	SIGNATURE			FILE MAINT 79		DATA SEQ 80

DD FORM NOV 77 2026 PREVIOUS EDITION WILL BE USED.

S/N 01021-LF-002-0261

AMR00088

Figure 5-16.—Oil Analysis Request, DD Form 2026.

The prime objective of the Hydraulic Contamination Control Program is to maintain a satisfactory level of fluid purity in hydraulic systems, thereby providing for safe and efficient operation of naval aircraft and SE. Undetected and uncontrolled contamination in an aircraft hydraulic system poses a

serious threat to flight safety. This program is an ongoing effort to control hydraulic fluid contamination.

AIRCRAFT FUEL SURVEILLANCE PROGRAM

Foreign contaminants and water in aircraft fuel systems constitute a major hazard in naval aircraft. Harmful effects of water, particulates, and microbiological growth include erratic or incorrect fuel quantity indications; icing of filters, valves, and other fuel system components; engine failure caused by carburetor/fuel control icing or malfunction; and jet engine starting difficulties. Further, if contamination remains undetected, rubber fuel cells deteriorate and become permanently damaged. Constant vigilance by maintenance personnel is required to ensure that clear, bright, and dry fuel is delivered to the aircraft, and subsequently to its engines.

All aviation fuels are produced under rigidly controlled specifications. To maintain its high quality, maintenance personnel must take careful and continual measures to prevent contamination.

Contamination can occur from fuel mixing with other bulk petroleum products as well as from dirt, rust, and water. Serious engine and airframe problems develop if inadequate attention and effort are given to maintaining fuel quality. Since no two fuel systems are identical, it is not possible to establish rigid and detailed procedures that will apply in all situations.

The plane captain takes fuel samples from low-point drains of all fuel cells/tanks before the first flight of the day. This action is normally accomplished during the daily inspection. This also includes any auxiliary, external, or in-flight refueling tanks. Additional information on this program can be obtained in the *Aircraft Refueling NATOPS Manual,* NAVAIR 00-80T-109.

Q34. What builds a successful FOD program?

Q35. What officer coordinates the Tool Control Program?

Q36. What is the most significant benefit to the Tool Control Program?

Q37. What is the prime objective of the hydraulic contamination control program?

Q38. What publication contains detailed information on the Aircraft Fuel Surveillance Program?

AVIATORS BREATHING OXYGEN (ABO) SURVEILLANCE PROGRAM

Aviator's breathing oxygen (ABO) comes in both gaseous and liquid states. Liquid oxygen (LOX) is converted to a gaseous state before its delivery to the aircrew. Because oxygen can be contaminated easily, LOX requires frequent and continual monitoring by personnel to ensure detection of contamination. The safety of the aircrew is of the utmost priority.

An oxygen surveillance program is the primary method of ensuring that each operation in the LOX supply system is carried out in strict compliance with established procedures. Surveillance begins with procurement or generation of LOX and continues throughout storage, handling, transfer, and servicing in the aircraft. This program is also applicable to all naval activities involved in the support and manufacture of LOX and related equipment.

Each person associated with the Aviation Breathing Oxygen Surveillance and Contamination Program should have a thorough knowledge of the characteristics of liquid oxygen and gaseous oxygen and the hazards of contamination. Each person should also know the quality standards listed in the *ABO Surveillance Program Laboratory Manual and Field Guide,* A6-332A0-GYD-000.

EGRESS SYSTEM CHECKOUT PROGRAM

The high-performance aircraft used by the Navy places extreme demands on emergency escape systems. These systems contain high-explosive devices that are designed for onetime use only. Actuation of these devices could result in severe injury or death to personnel and damage to or destruction of aircraft. Therefore, because of the inherent dangers associated with ejection seats and canopy systems, an egress systems checkout procedure is required.

The egress/environmental work center (AME shop) indoctrinates all personnel in the hazards and safety precautions associated with these systems. A system checkout must be given by a qualified AME to all new maintenance personnel before they perform any aircraft maintenance work. Maintenance personnel must be checked out every 6 months thereafter before the last day of the requalification month. In addition, any personnel removed from aircraft maintenance responsibilities for more than 90

days must receive an egress system checkout before performing any aircraft maintenance. The egress/environmental work center and the other maintenance work centers maintain records of system checkouts. including date given, date due, and the signature of the AME performing the checkout. The plane captain must make sure that new personnel assigned to him or her for training have a current egress system checkout before entering the cockpit.

ELECTROSTATIC DISCHARGE (ESD) CONTROL/PREVENTION PROGRAM

ESD is the transfer of electrostatic charge between bodies at different electrostatic potentials. This is caused by direct contact or induced by an electrostatic field.

ESD-safe areas are required in such areas as supply. production control, and maintenance shops. In these areas, the technician is tied to a soft ground that reduces high current flow for personal safety.

The QA division ensures the following guidelines are followed in the work center.

- All work centers involved in avionic maintenance and handling of ESD-sensitive assemblies have ESD training programs.
- ESD protective equipment and materials are used to ensure personnel and equipment safety.

WARNING

For personnel safety, all energized equipment must be isolated from the work station mat and other conductive material.

TRAINING PROGRAM

The Navy places great emphasis on effective and continual training. A supervisor in a maintenance activity has an ongoing responsibility for training his or her personnel. An efficient training program minimizes the loss when experienced maintenance personnel transfer from the activity. Since the activity's operational readiness depends largely on the capability of the maintenance department, the quality of the training program is important.

In-service training is a command responsibility. Since this training represents a major contribution to the Navy's overall training effort, a systematic in-service training program must be conducted.

In-service training is conducted in two methods-formal and informal. Formal in-service training is conducted through formal lectures and computer-based training (CBT). Informal in-service training is conducted through the performance of on-the-job training (OJT) and the completion of Personal Qualification Standards and required reading.

As a plane captain, you will be exposed to all types of training. Portions of this training will improve your skills as a plane captain and prepare you for further advancement. Other portions of this training, such as fire fighting, may, in an emergency situation, save your life. You should always learn all you can in any training situation.

HEARING CONSERVATION PROGRAM

Hearing loss is a source of concern within the Navy, both ashore and afloat. Hearing loss can occur from exposure to impulse or blast noise (gunfire, rockets, etc.) or from continuous or intermittent sounds, such as jet engines or machinery noise in industrial-type activities. Such loss may be temporary, disappearing after a brief period of nonexposure, or it may become permanent through repeated exposures to intense noise levels. Hearing loss caused by exposure to hazardous noise and the high cost of associated compensation claims pose a significant problem, which requires action to reduce or eliminate hazardous noise levels.

Your responsibilities as a plane captain make it impossible for you to avoid noise in day-to-day flight operations, but you are provided with the means of protecting your hearing. Always wear your sound attenuators (often referred to as ears) and follow the rules for noise exposure for the type of aircraft you are working on. The hearing conservation program is outlined in *Navy Occupational Safety and Health Program Manual,* OPNAVINST 5100.23, and has established as its goal the elimination and prevention of hearing loss.

RECOVERY AND RECLAMATION OF CRASH-DAMAGED AIRCRAFT

Aircraft accidents/incidents involving exposure to gross amounts of salt water. fire-extinguishing agents, or other corrosive agents require emergency action to

prevent further damage to the aircraft and/or systems. The majority of emergency reclamation actions are caused by carelessness or the lazy attitudes of individuals. For example, overhead sprinkler systems are often triggered by improper use of ground support equipment (exhausts not vented properly). Failure to close a canopy on an aircraft compounds the problem by making the aircraft subject to water damage. Proper training or supervision should keep reclamation actions to a minimum. General procedures and basic policies for the recovery, reclamation, and transfer of crash-damaged aircraft are contained in *The Naval Aviation Safety Program,* OPNAVINST 3750.6; *Aircraft Material Condition Definitions, Mission-Essential Subsystems Matrices (MESMs), and Mission Descriptions,* OPNAVINST 5442.4; and *Policy and Procedures for Aircraft, Aircraft Engines and Related Aeronautical Items Reclamation and Disposal Program,* NAVAIRINST 4500.11. These publications are available on a need-to-know basis only.

SUPPORT EQUIPMENT TRAINING AND LICENSING PROGRAM

The assistant aircraft maintenance officer manages the Support Equipment (SE) Training and Licensing Program. The quality assurance (QA) division monitors it. The results of improper use of support equipment are excessive ground handling accidents, excessive repair costs to equipment and aircraft, the reduction of operational readiness, and personnel injuries-the most expensive cost of all. The major reason for the improper use of SE is attributed to the lack of training and effective supervision.

The training program consists of classroom training conducted by the supporting activity's AIMD, on-the-job training, and completing any personnel qualification standard (PQS) for that equipment. Classroom training is given so that personnel will know the proper operation and organizational maintenance for a particular piece of support equipment. Upon satisfactory completion of the training conducted by the supporting activity, a completion certificate for the individual trained on a specific item of SE is forwarded to the permanent activity. The activity, upon receiving the completion certificate, forwards it to the appropriate division officer. The division officer ensures that the individual has received the appropriate amount of "on aircraft" training to become qualified to use the specific unit of SE. The Restriction block on the SE license must identify the type, model, and series of aircraft on which the equipment can be used.

Once satisfied that the individual is qualified, the division officer will endorse the completion certificate and initiate the support equipment operator's license (fig. 5-17). The individual will sign the license, and then it is forwarded to the maintenance officer for signature. Each piece of equipment must be itemized; for example, NC8, NC1O, etc. Any license containing general equipment statements (aircraft tow tractor, mobile electric power plant, etc.) is not valid. Only one item per line is listed. After the signatures have been obtained, the license issued is valid for 3 years for equipment and aircraft regardless of the activity to which the licensee is assigned.

Activities honoring licenses issued by other commands verify the operator's proficiency before allowing the individual use of the equipment. Transfer to an activity operating the same SE detailed on the license, but with a different type/model aircraft, invalidates the license. Transfer to an activity operating the same type/model but a different series merely requires verification of proficiency. License renewal on a new card, whether issued at the time of expiration or transfer, is granted only after a new determination of qualifications has been made.

Qualification for license renewal consists of passing the same written and practical tests used for initial licensing to ensure equipment O-level maintenance/operation and on-aircraft proficiency. Failure requires personnel to repeat the course of instruction for the equipment concerned. The expiration date for each specific type of SE is noted in column 8B on the license. The "Date Expires" block on the front of the license should be marked "NA." Commanding officers (COs) of issuing activities may, as conditions warrant, require personnel in their activities to be requalified sooner.

SUPPORT EQUIPMENT MISUSE/ABUSE PROGRAM

Support Equipment Misuse/Abuse forms can be submitted by anyone witnessing misuse or abuse (fig. 5-18). The division of the individual originating the report retains a copy of the Support Equipment Misuse/Abuse report, and the original report is sent to the organization that has Individual Material Readiness List (IMRL) reporting responsibility for the

USN AVIATION SUPPORT EQUIPMENT OPERATOR'S LICENSE		
1. NAME OF OPERATOR	2. RATE	3. DATE EXPIRES
4. U.S. GOVERNMENT/STATE MOTOR VEHICLE OPERATOR'S LICENSE		
CARD NO.	ACTIVITY/STATE	
LICENSEE IS QUALIFIED TO OPERATE AVIATION SUPPORT EQUIPMENT SPECIFIED ON THIS CARD SUBJECT TO STATED RESTRICTIONS.		
5. NAME AND LOCATION OF ISSUING ACTIVITY		
NOT TRANSFERABLE Card must be carried at all times when operating aviation support equipment.	6. SIGNATURE OF LICENSEE (Not Valid Unless Signed)	
	7. ISSUED BY (Signature and Title)	
OPNAV 4790/102 (REV. 10/82)		S/N 0107-LF-047-9511

8A. TYPE EQUIPMENT(S) FOR WHICH QUALIFIED	B. EXPIRATION DATE	C. CERTIFIED BY (Initials)

AMR00089

Figure 5-17.—CSN Aviation Support Equipment Operators' License.

SE. Also, a copy of the report is sent to the commanding officer of the command to which the offender is attached and/or the commanding officer of the command that held custody of the item where the misuse or abuse occurred for appropriate action. As a minimum, the QA division of the command receiving the report conducts an investigation. QA also performs analysis to provide appropriate recommendations for corrective action. Reports will be returned to the command having IMRL reporting responsibility within 10 working days.

Q39. Any personnel removed from aircraft maintenance responsibilities for more than how many days must receive a egress system checkout prior to performing aircraft maintenance?

Q40. What manual outlines the hearing conservation program?

Q41. What person manages the Support Equipment Training and Licensing Program?

Q42. Who initiates a Support Equipment Misuse/Abuse form?

SUPPORT EQUIPMENT MISUSE/ABUSE

OPNAV 4790/108 (6-81) S/N 0107-LF-047-9550

CONTROL NO.

FROM

TO

THE FOLLOWING INFORMATION IS SUBMITTED IN REGARDS TO A REPORT OF MISUSE/ABUSE:

PERSON WHO MISUSED/ ABUSED EQUIPMENT

NAME

RANK/RATE

ORGANIZATION/UNIT

SE LICENSE NO.

GOVT OPERATOR LICENSE NO.

LOCATION AND EQUIPMENT INVOLVED

LOCATION

TYPE EQUIPMENT PN/FSN

TIME

DATE

EQUIPMENT SERIAL NO.

JCN

NARRATIVE DESCRIPTION

SAMPLE

PERSON CITING MISUSE/ ABUSE

NAME

RANK/RATE

ORGANIZATION/UNIT

WAS LICENSE CONFISCATED? ☐ YES ☐ NO

IF YES, LICENSE IS BEING HELD BY:

REMARKS

SIGNATURE AND TITLE OF REPORTING OFFICIAL

DATE

OPNAV 4790/108 (6-81) (BACK)

FIRST ENDORSEMENT

FROM:

TO:

VIA:

SUBJ: MISUSE/ABUSE

1. ACTION TAKEN/RECOMMENDATIONS

SIGNATURE AND TITLE

AMR00090

Figure 5-18.—Support Equipment Misuse/Abuse Form (OPNAV 4790/108).

AIRCRAFT INSPECTIONS

LEARNING OBJECTIVE: Define the types of aircraft inspections required for proper maintenance and safety of naval aircraft.

Aircraft are subject to a variety of stresses, strains, vibrations, and detrimental environments. If not inspected regularly, the aircraft would soon become inoperable. Maintenance is performed in conjunction with inspections. This enables the aircraft to be flown safely until the next inspection. The types of inspections that are performed by activities responsible for the maintenance of naval aircraft are defined in the following paragraphs.

Acceptance inspection. This inspection is performed at the time a reporting custodian accepts a newly assigned aircraft, and upon receipt of or return of an aircraft from standard depot level maintenance (SDLM) or other major depot level work. It includes an inventory of all equipment listed in the Aircraft Inventory Record (AIR), a configuration verification, hydraulic fluid sampling, and a full systems functional check flight (FCF). It also includes an inspection of emergency systems and egress equipment. This should include functionally checking such items as fuel, oil. hydraulic shutoff valves, and prop feathering, as well as the verification of cartridge-actuated devices (CADS) and aircrew escape propulsion systems (AEPSs). In addition, a daily inspection, as required by the applicable Planned Maintenance System (PMS) publication, should also be done. Activities may elect to increase the depth of inspection if the equipment condition indicates such action is warranted.

Transfer inspection. This inspection is performed at the time a reporting custodian transfers an aircraft, including transfers to SDLM. It includes an inventory of all equipment listed in the AIR, verification of CADS and AEPS, a configuration verification, hydraulic fluid sampling, and a daily inspection as required by the applicable PMS publication. Activities may elect to increase the depth of inspection if the equipment condition indicates such action is warranted.

Daily inspection. Daily inspections are accomplished between the last flight of the day and the next scheduled flight. The daily inspection is valid for a period of 72 hours, provided no flight occurs during this period and no maintenance other than servicing has been performed. If more than 72 hours elapse between the inspection and the next flight, the inspection must be repeated. This inspection is performed to check equipment that requires a daily verification of satisfactory functioning. It also involves the search for and correction of relatively minor problems to prevent their progressing to a state that would require major work to remedy the problems. Other items that require inspection at intervals more frequent than prescribed for calendar inspections are also included on the daily inspection, and thus are done along with the daily inspection on the day they become due.

Conditional inspection. Conditional maintenance requirements are unscheduled events required as the result of a specific overlimit condition, or as a result of circumstances or events that create an administrative requirement for an inspection. A logbook entry is required for a conditional maintenance requirement that prescribes inspections to determine equipment condition; for example, airframe hard landing, precarrier/predeployment, aircraft ferry, acceptance/transfer, or engine overspeed/overtemp inspections. Those conditional requirements that specify servicing or fluid sampling need not be logged.

Preflight inspection. The preflight inspection consists of checking the aircraft for flight readiness by performing visual examinations and operational tests to discover defects and maladjustments that, if not corrected, would cause accidents or aborted missions. This inspection is conducted before each flight to ensure the integrity of the aircraft for flight and to verify proper servicing. It is valid for a period of 24 hours, provided no flight and no maintenance other than servicing occurs during this period. When all preflight requirements are contained within the daily card set, accomplishment of the daily requirements before the first flight of the day satisfies the preflight inspection requirements. When all preflight requirements are not included in the daily card set, the preflight inspection must be performed before flight. The application statement contained on the applicable model weapons system MRC introduction card states specific requirements.

Postflight inspection. The postflight inspection is accomplished after each flight or ground operation of the aircraft. The postflight inspection is mainly a check for obvious defects (hydraulic, fuel, and oil leakage or structural damage) and the installation of the necessary safety locks and pins.

Turnaround inspection. Turnaround inspections are conducted between flights to ensure the integrity

of the aircraft for flight, verify proper servicing, and to detect degradation that may have occurred during the previous flight. The turnaround inspection is valid for a period of 24 hours, provided that no flight and no maintenance other than servicing occur during this period. The accomplishment of the daily inspection does not satisfy the turnaround requirements. On aircraft that are furnished turnaround inspection requirements, the preflight and postflight requirements do not apply.

Phase inspection. The phase maintenance concept divides the total scheduled maintenance requirements into small packages or phases of approximately the same work content. These are done sequentially at specified intervals. Completion of all required phases at their specified intervals completes the phase inspection cycle. The cycle is repetitive for the service life of the aircraft and is not interrupted during SDLM. Phase inspections are not included in the SDLM specifications, and are not done during the SDLM process. Aircraft returning from SDLM/special rework have the next phase due upon expiration of the authorized interval from the last phase inspection completed.

Special inspection. A special inspection is a scheduled inspection with a prescribed interval other than daily or phase. These intervals are specified in the applicable PMS publication and are based on elapsed calendartime, flight hours, operating hours, or number of cycles/events; for example, 7, 28 days; 50, 100, 200 hours; 10, 100 arrestments; or 5,000 rounds fired.

Zonal inspection. A zonal inspection is a general inspection of a specific area of an aircraft. These inspections are for obvious defects, such as leaks, frayed cables, cracks, corrosion, or physical damage. Zonal inspections are normally performed in conjunction with other scheduled maintenance tasks by the rating assigned, such as an Aviation Electronics Technician (AT) rating assigned to perform an inspection on a radar antenna may also be assigned a zonal inspection of the compartment for obvious defects.

NOTE: You should refer to the *Naval Aviation Maintenance Program (NAMP),* OPNAVINST 4790.2, for added information about the maintenance program and the forms and records used in the program.

Q43. *What type inspection is performed* at *the* time a *reporting custodian accepts a newly assigned aircraft?*

Q44. *What type inspection is performed to check equipment that requires a daily verification of satisfactory functioning.*

Q45. *What type inspection is required as the result of a specific overlimit condition?*

Q46. *A preflight inspection is valid for a period of how many hours?*

Q47. *What type inspection consists of checking the aircraft for fright readiness by performing visual examinations and operational tests to discover defects and maladjustments that, if not corrected, would cause accidents or aborted missions?*

Q48. *What type inspections are normally performed in conjunction with other scheduled maintenance tasks by the rating assigned?*

SUMMARY

This chapter identified the organization of the line division. Responsibilities and qualification of a plane captain were covered but were not all inclusive. Special safety requirements and safety precautions for aircraft ashore and afloat were also mentioned. Special programs covered in this chapter touch on the basics. The information contained in these programs is more than any individual could be expected to memorize or be solely responsible for. You should keep informed of changes to programs at your command that might affect your work center.

ANSWERS TO REVIEW QUESTIONS

A1. Maintenance department.

A2. The Support Equipment Branch.

A3. The Plane Captain Branch.

A4. The commanding officer.

A5. 100 feet.

A6. Nonsparking tools.

A7. Aft center body, upper speed brake, directly aft of overwing fairings and directly behind the canopy.

A8. The wind may carry fuel vapors toward a source of ignition.

A9. Three.

A10. Identify the aviation fuel.

A11. Pressure fueling gives aircraft a faster turnaround time.

A12. The appropriate aircrafr Maintenance Instruction Manuals (MIMs) and the Aircraft Refueling NATOPS Manual, NAVAIR 00-80T-109.

A13. The internal fluid resistance to flow caused by molecular attraction.

A14. The Saybolt scale.

A15. MIL-H-83282.

A16. It should be properly disposed of immediately.

A17. Daily.

A18. This prevents the operator from being struck by debris if the tire were to fail.

A19. The wheel halves may separate when the axle nut is removed.

A20. AME rating.

A21. It is used to service struts, accumulators, air storage bottles, and other components serviced with high-pressure air.

A22. It removes moisture that may have adhered to the valves or that was accidentally introduced into the system.

A23. 3 gallons. 2 gallons in the unit reservoir and 1 gallon in the can.

A24. The flight deck.

A25. Only when actually performing maintenance on the propeller.

A26. No! Serious injury can still result by being pulled against the protective screen.

A27. High temperature and high velocity of exhaust gases.

A28. 140 decibels (dB).

A29. Ejection seats.

A30. The area on both sides of the tire and wheel, in line with the axle.

A31. *CO_2.*

A32. *LOX can explode when it comes in contact with oil or grease.*

A33. *Limited space and tempo of operations.*

A34. *Command support, personnel knowledge and awareness, and its integration into the total maintenance effort.*

A35. *The material control officer.*

A36. *Saving lives and equipment by eliminating tool FOD-related accidents.*

A37. *To maintain a satisfactory level of fluid purity in hydraulic systems to provide safe and efficient operation of naval aircraft and SE.*

A38. *The Aircraft Refueling NATOPS Manual, NAVAIR 00-80T-109.*

A39. *90 days.*

A40. *Navy Occupational Saftey and Health Program Manual, OPNAVINST 5100.23.*

A41. *The assistant aircraft maintenance officer (AAMO).*

A42. *Anyone witnessing the misuse or abuse.*

A43. *Acceptance inspection.*

A44. *Daily inspection.*

A45. *Conditional inspection.*

A46. *24 hours, provided no flight and no maintenance have occurred during this period.*

A47. *Preflight inspection.*

A48. *Zonal inspections.*