Chapter 9

Communications and Lighting Systems

Topics

1.0.0 Fiber Optics

2.0.0 Fiber Optics Advanced

3.0.0 Optical Detectors and Fiber Optic Receivers

4.0.0 Fiber Optic System Topology

5.0.0 Fiber Optic System Installation

6.0.0 Fiber Optic Measurements

7.0.0 Mechanical and Fusion Splices

8.0.0 Public Address System

9.0.0 Interoffice Communication Systems

10.0.0 Area Lighting Systems

11.0.0 Fixtures

12.0.0 Floodlights

13.0.0 Security Lighting

To hear audio, click on the box.

Overview

Communications and Lighting Systems play an important role in mission accomplishment. Operating fiber optic, public address, and interoffice communication systems or area, security, and floodlight lighting systems requires a through knowledge of their hookup, operation, maintenance, and repair.

As a Construction Electrician, you may have the responsibility for the installation, maintenance, and repair of all these systems and their associated equipment.

Objectives

When you have completed this chapter, you will be able to do the following:

1. Describe the purpose and components of fiber optic systems.
2. Describe advanced operational procedures associated with fiber optics.
3. Describe optical detectors and fiber optic receivers.
4. Identify fiber optic topology.

5. Describe the installation procedures associated with fiber optics.
6. Identify the different types of fiber optic measurements.
7. Describe the installation, maintenance, and repair of public address systems.
8. Describe the installation, maintenance, and repair of interoffice communication systems.
9. Describe the different types of area lighting systems.
10. Describe the different types of light circuits.
11. Describe the installation, maintenance, and repair of floodlights.
12. Describe the installation, maintenance, and repair of security systems.

Prerequisites

None

This course map shows all of the chapters in Construction Electrician Basic. The suggested training order begins at the bottom and proceeds up. Skill levels increase as you advance on the course map.

Test Equipment, Motors, and Controllers	↑	C E
Communications and Lighting Systems		
Interior Wiring and Lighting		
Power Distribution		
Power Generation		
Basic Line Construction/Maintenance Vehicle Operations and Maintenance		B A
Pole Climbing and Rescue		S
Drawings and Specifications		I
Construction Support		C
Basic Electrical Theory and Mathematics		

Features of this Manual

This manual has several features which make it easier to use online.

- Figure and table numbers in the text are italicized. The figure or table is either next to or below the text that refers to it.
- The first time a glossary term appears in the text, it is bold and italicized. When your cursor crosses over that word or phrase, a popup box displays with the appropriate definition.
- Audio and video clips are included in the text, with an italicized instruction telling you where to click to activate it.
- Review questions that apply to a section are listed under the Test Your Knowledge banner at the end of the section. Select the answer you choose. If the answer is correct, you will be taken to the next section heading. If the answer is incorrect, you will be taken to the area in the chapter where the information is for review. When you have completed your review, select anywhere in that area to return to the review question. Try to answer the question again.
- Review questions are included at the end of this chapter. Select the answer you choose. If the answer is correct, you will be taken to the next question. If the answer is incorrect, you will be taken to the area in the chapter where the information is for review. When you have completed your review, select anywhere in that area to return to the review question. Try to answer the question again.

1.0.0 FIBER OPTICS

People have used light to transmit information for hundreds of years. However, it was not until the 1960s with the invention of the ***laser*** that widespread interest in optical (light) systems for data communications began. The invention of the laser prompted researchers to study the potential of fiber optics for data communications, sensing, and other applications. Laser systems could send a much larger amount of data than the telephone, microwave, and other electrical systems. The first experiment with the laser involved letting the laser beam transmit freely through the air. Also, researchers conducted experiments that transmitted the laser beam through different types of waveguides. Glass fibers, gas-filled pipes, and tubes with focusing lenses are examples of optical waveguides.

Glass fibers soon became the preferred medium for fiber-optic research. Initially, the large losses in the optical fibers prevented them from replacing coaxial cables. Loss is the decrease in the amount of light reaching the end of the fiber. Early fibers had losses around 1,000 dB/km, making them impractical for communications use. In 1969, several scientists concluded that impurities in the fiber material caused the signal loss in optical fibers. The basic fiber material did not prevent the light signal from reaching the end of the fiber. These researchers believed it was possible to reduce the losses in optical fibers by removing the impurities. By removing the impurities, researchers made possible the construction of low-loss optical fibers.

Developments in semiconductor technology that provided the necessary light sources and detectors furthered the development of fiber optics. Conventional light sources, such as lamps or lasers, were not easy to use in fiber-optic systems. These light sources tended to be too large and required lens systems to launch light into the fiber. In 1971, Bell Laboratories developed a small area light-emitting diode (LED). This light source was suitable for a low-loss coupling to optical fibers. Researchers could then perform source to fiber jointing easily and repeatedly. Early semiconductor sources had operating lifetimes of only a few hours; however, by 1973, projected lifetimes of lasers advanced from a few hours to greater than 1,000 hours. By 1977, projected lifetimes of lasers advanced to greater than 7,000 hours. By 1979, these devices were available with projected lifetimes of more than 100,000 hours.

In addition, researchers also continued to develop new fiber-optic parts. The types of new parts developed included low-loss fibers and fiber cables, splices, and connectors. These parts permitted demonstration and research on complete fiber-optic systems.

Advances in fiber optics have permitted the introduction of fiber optics into present applications. These applications are mostly in telephone long haul systems but are growing to include cable television, computer networks, video systems, and data links. Research should increase system performance and provide solutions to existing problems in conventional applications. The impressive results from early research show there are many advantages offered by fiber-optic systems.

1.1.0 Fiber Optic Systems

System design has centered on long-haul communications and subscriber-loop plants. The subscriber-loop plant is the part of a system that connects a subscriber to the nearest switching center. Cable television is an example. Also, limited work has been done on short-distance applications and some military systems. Initially, central office trunking required multimode optical fibers with moderate to good performance. Fiber performance depends on the amount of loss and signal distortion introduced by the fiber

when it is operating at a specific wavelength. Two basic types of optical fibers are used in industry: multimode and single mode.

Future system design improvements depend on continued research. Researchers expect fiber-optic product improvements to upgrade performance and lower costs for short-distance applications. Future systems center on broadband services that will allow transmission of voice, video, and data. Services will include television, data retrieval, video word processing, electronic mail, banking, and shopping.

1.2.0 Advantages and Disadvantages of Fiber Optics

Fiber-optic systems have many attractive features that are superior to electrical systems. These include improved system performance, immunity to electrical noise, signal security, and improved safety and electrical isolation. Other advantages include reduced size and weight, environmental protection, and overall system economy. Table 9-1 details the main advantages of fiber-optic systems.

Despite the many advantages of fiber-optic systems, there are some disadvantages. Because of the relative newness of the technology, fiber-optic components are expensive. Fiber-optic transmitters and receivers are still relatively expensive compared to electrical interfaces. The lack of standardization in the industry has also limited the acceptance of fiber optics. Many industries are more comfortable with the use of electrical systems and are reluctant to switch to fiber optics; however, industry researchers are eliminating these disadvantages.

Standards committees are addressing fiber-optic part and test standardization. The cost to install fiber optic systems is falling because of increased use of fiber-optic technology. Published articles, conferences, and lectures on fiber optics have begun to educate managers and technicians. As the technology matures, the use of fiber optics will increase because of its many advantages over electrical systems.

Table 9-1 — Advantages of Fiber Optics.

System Performance	Greatly increased bandwidth and capacity Lower signal attenuation (loss)
Immunity to Electrical Noise	Immune to noise (electromagnetic interference [EMI] and radio frequency interference [RFI]) No cross talk Low bit error rates
Signal Security	Difficult to tap Nonconductive (does not radiate signals)
Electrical Isolation	No common ground required Freedom from short circuits and sparks
Size and Weight	Reduced size and weigh cables
Environmental Protection	Resistant to radiation and corrosion Resistant to temperature variations Improved ruggedness and flexibility Less restrictive in harsh environments
Overall System Economy	Low per channel cost Lower installation cost Principal material, silica is abundant, and inexpensive (source is sand)

1.3.0 Basic Structure of an Optical Fiber

The basic structure of an optical fiber consists of three parts: the core, the ***cladding***, and the coating or buffer. The basic structure of an optical fiber is shown in *Figure 9-1*. The core is a cylindrical rod of dielectric material. Dielectric material conducts no electricity. Light propagates mainly along the core of the fiber. The core is generally made of glass. It is surrounded by a layer of material called the cladding. Even though light will propagate along the fiber core without the layer of cladding material, the cladding does perform some necessary functions.

The cladding layer is also made of a dielectric material, generally glass or plastic, and performs the following functions:

- Reduces loss of light from the core into the surrounding air
- Reduces scattering loss at the surface of the core
- Protects the fiber from absorbing surface contaminants
- Adds mechanical strength

For extra protection, the cladding is enclosed in an additional layer called the coating or buffer.

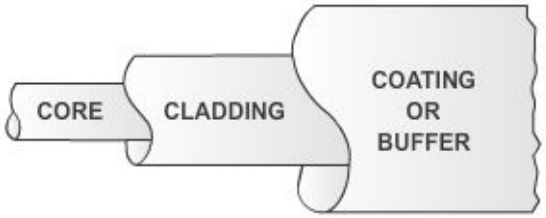

Figure 9-1 — Basic structure of an optical fiber

The coating or buffer is a layer of material used to protect an optical fiber from physical damage. It is made of a type of plastic. The buffer is elastic in nature and prevents abrasions. It also, prevents the optical fiber from scattering losses caused by microbends. ***Microbends*** occur when an optical fiber is placed on a rough and distorted surface. Microbends are discussed later in this chapter.

1.4.0 Optical Cables

Optical fibers have small cross sectional areas. Without protection, optical fibers are fragile and can be broken. The optical cable structure, which includes buffers, strength members, and jackets, protects optical fibers from environmental damage. Many factors influence the design of fiber-optic cables. The cable design depends on the intended application of the cable. Properly designed optical cables perform the following functions:

- Protect optical fibers from damage and breakage during installation and over the lifetime of the fiber
- Provide stable fiber transmission characteristics compared with uncabled fibers. Stable transmission includes stable operation in extreme climate conditions
- Maintain the physical integrity of the optical fiber by reducing the mechanical stresses placed on the fiber during installation and use. Static fatigue caused by tension, torsion, compression, and bending can reduce the lifetime of an optical fiber.

1.5.0 Fiber Buffers

Coatings and buffers protect the optical fiber from breakage and loss caused by microbends. During the fiber drawing process, the addition of a primary coating protects the bare glass from abrasions and other surface contaminants. For additional protection, manufacturers add a layer of buffer material, which provides additional mechanical protection for the fiber and helps preserve its inherent strength.

Manufacturers use a variety of techniques to buffer optical fibers. The types of fiber buffers include tight buffered, loose tube, and gel filled loose tube. *Figure 9-2* shows each type of fiber buffer. The choice of buffering techniques depends on the intended application. In large fiber count commercial applications, manufacturers use the loose tube buffers. In commercial building and Navy applications, manufacturers use tight buffers.

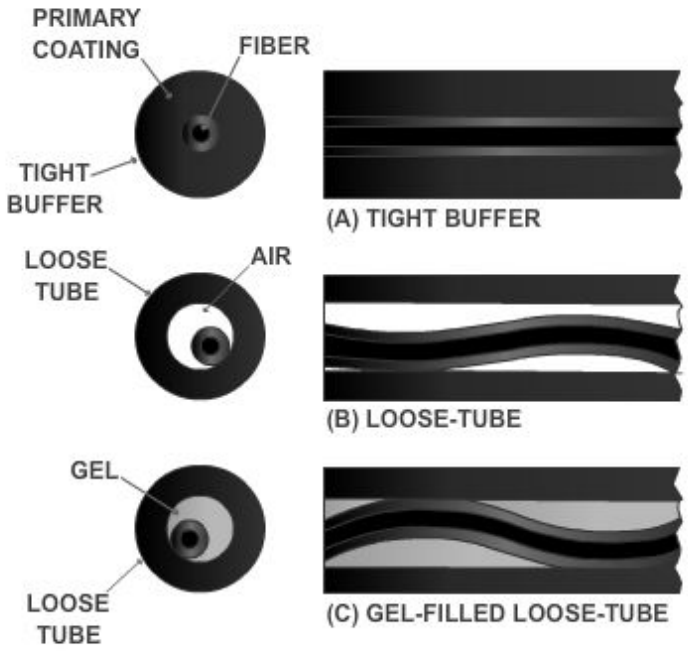

Figure 9-2 — Tight buffered, loose tube, and gel filled loose tube buffer techniques.

1.6.0 Cable Strength and Support Members

Fiber-optic cables use strength members to increase the strength of the cable and protect the fiber from strain. Fiber-optic cables may use central support members in cable construction. The central support members generally have buffered fibers or single fiber sub cables stranded over their surface in a structured, ***helical*** manner. The central members may support the optical fibers as cable strength members or may only serve as fillers. Strength and support members must be light and flexible. The materials used for strength and support include steel wire and textile fibers (such as nylon and arimid yarn). They also include carbon fibers, glass fibers, and glass reinforced plastics.

1.7.0 Cable Jacket Material

The jacket, or sheath, material provides extra environmental and mechanical protection. Jacket materials may possess any number of the following properties:

- Low smoke generation
- Low toxicity
- Low halogen content
- Flame retardance
- Fluid resistance
- High abrasion resistance
- Stable performance over temperature

It is difficult to produce a material compound that satisfies every requirement without being too costly. Jacket materials currently used include polyethylene, polyvinyl chloride, polyurethane, and polyester ***elastomers***. Most commercial jacket materials are unsuitable for use in naval applications.

1.8.0 Cable Designs

Manufacturers design fiber-optic cables for specific applications. For example, is the cable buried underground or hung from telephone poles? Is the cable snaked through cableways, submerged in water, or just laid on the ground? Is the cable used in industrial, telecommunication, utility, or military applications? Each type of application may require a slightly different cable design.

Agreement on standard cable designs is difficult. Cable design choices include jacket materials and water optic cables. Some fiber-optic cables are used in commercial applications, others in military applications. Standard commercial cable designs will develop over time as fiber-optic technology becomes more established.

1.9.0 Fiber Optic Data Links

A fiber-optic data link sends input data through fiber-optic components and provides this data as output information. It has the following three basic functions:

- To convert an electrical input signal to an optical signal
- To send the optical signal over an optical path
- To convert the optical signal back to an electrical signal

A fiber-optic data link consists of three parts: transmitter, optical fiber, and receiver**.** *Figure 9-3* is an illustration of a fiber-optic data-link connection. The transmitter, optical fiber, and receiver perform the basic functions of the fiber-optic data link. Each part of the data link is responsible for the successful transfer of the data signal. A fiber-optic data link needs a transmitter that can effectively convert an electrical input signal to an optical signal and launch the data-containing light down the optical fiber. Also, the fiber-optic data link needs a receiver that can effectively transform this optical signal back into its original form. This means that the electrical signal provided as data output should exactly match the electrical signal provided as data input.

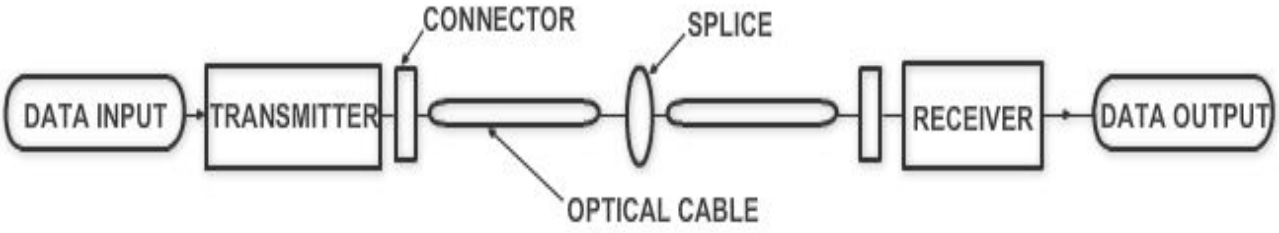

Figure 9-3 — Parts of a fiber optic data link.

1.10.0 Fiber Optic Splices

A fiber-optic ***splice*** is a permanent fiber joint the purpose of which is to establish an optical connection between two individual optical fibers. System design may require that fiber connections have specific optical properties (low loss) that are met only by fiber splicing. Also, fiber-optic splices permit the repair of optical fibers damaged during installation, accident, or stress. System designers generally require fiber splicing whenever repeated connection or disconnection is unnecessary or unwanted.

Mechanical and fusion splicing are the two broad categories of fiber splicing technique. A mechanical splice is a fiber splice where mechanical fixtures and materials perform fiber alignment and connection. A fusion splice is a fiber splice where localized heat fuses or melts the ends of two optical fibers together. Each splicing technique seeks to optimize splice performance and reduce splice loss. Low-loss fiber splicing results from proper fiber end preparation and alignment.

1.11.0 Fiber Optic Connectors

A fiber-optic connector is a device that permits the coupling of optical power between two optical fibers or two groups of fibers. Designing a device that allows for repeated fiber coupling without significant loss of light is difficult. Fiber-optic connectors must maintain fiber alignment and provide repeatable loss measurements during numerous connections. Fiber-optic connectors should be easy to assemble (in a laboratory or field environment), cost effective, and reliable. Fiber-optic connections using connectors should be insensitive to environmental conditions, such as temperature, dust, and moisture. Fiber-optic connector designs attempt to optimize connector performance by meeting each of these conditions.

1.11.1 Butt Joined Connectors and Expanded Beam Connectors

Butt jointed connectors and expanded beam connectors are the two basic types of fiber-optic connectors. Fiber-optic butt jointed connectors align and bring the prepared ends of two fibers into close contact. The end faces of some butt-jointed connectors touch, but others do not. depending upon the connector design. Types of butt-jointed connectors include cylindrical ferrule and biconical connectors. *Figure 9-4* shows a basic ferrule design. Fiber-optic expanded beam connectors use two lenses to first expand and then refocus the light from the transmitting fiber into the receiving fiber.

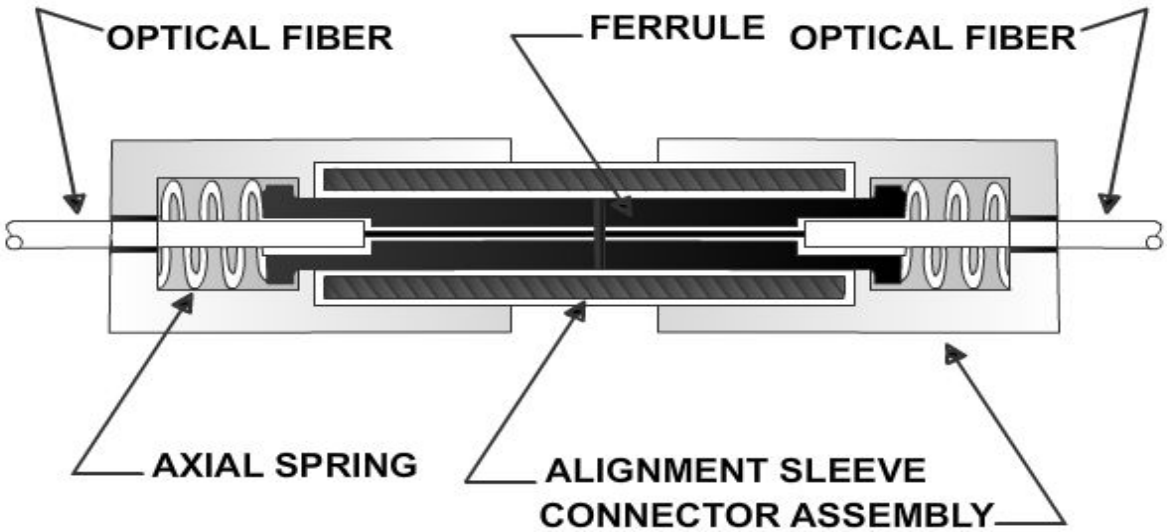

Figure 9-4 — Basic ferrule connector design.

Single fiber butt-jointed and expanded beam connectors normally consist of two plugs and an adapter (coupling device) (*Figure 9-5*).

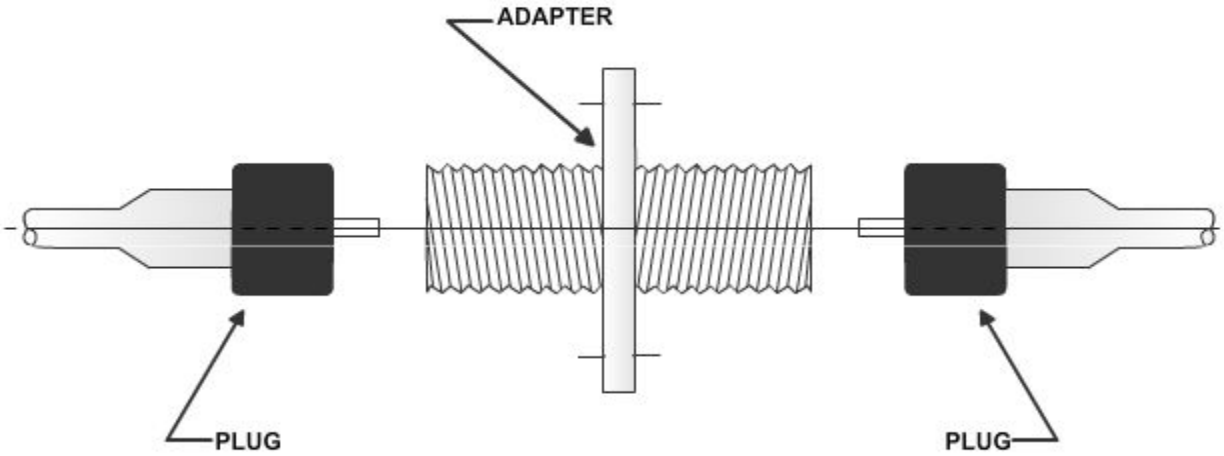

Figure 9-5 — Plug adapter plug configuration.

1.11.2 Expanded Beam Connector

The expanded beam connector, shown in *Figure 9-6*, uses two lenses to expand and then refocus the light from the transmitting fiber into the receiving fiber. Expanded beam connectors are normally plug adapter plug type connections Fiber separation and lateral misalignment are less critical in expanded beam coupling than in butt jointing. The same amount of fiber separation and lateral misalignment in expanded beam coupling produces a lower coupling loss than in butt jointing; however, angular misalignment is more critical. The same amount of angular misalignment in expanded beam coupling produces a higher loss than in butt jointing. Also, expanded beam connectors are much harder to produce. Recent applications for expanded beam connectors include multi-fiber connections, edge connections for printed circuit boards, and other applications.

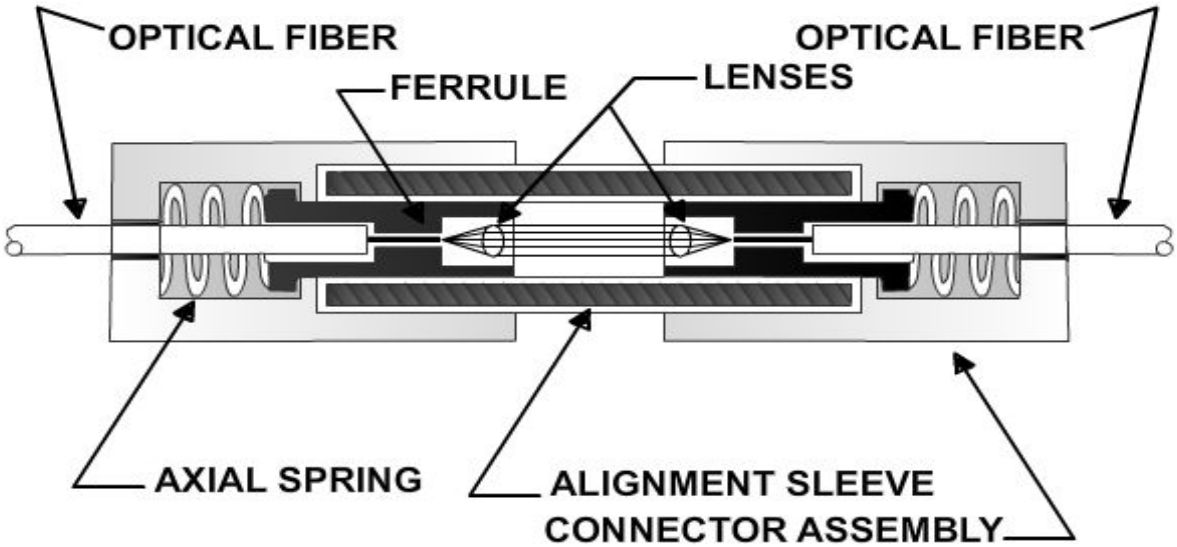

Figure 9-6 — Expanded beam connector operation.

1.12.0 Fiber Optic Couplers

Some fiber-optic data links require more than simple point-to-point connections. These data links may be of a much more complex design that requires multiport or other types of connections. In many cases, these types of systems require fiber-optic components that can redistribute (combine or split) optical signals throughout the system.

One type of fiber-optic component that allows for the redistribution of optical signals is a fiber-optic coupler. A fiber-optic coupler is a device that can distribute the optical signal (power) from one fiber among two or more fibers or combine the optical signal from two or more fibers into a single fiber.

Fiber-optic couplers can be either active or passive devices. The difference between active and passive couplers is that a passive coupler redistributes the optical signal without optical-to-electrical conversion. Active couplers are electronic devices that split or combine the signal electrically and use fiber-optic detectors and sources for input and output.

Figure 9-7 shows the design of a basic fiber-optic coupler. A basic fiber-optic coupler has N input ports and M output ports, which typically range from 1 to 64. The number of input ports and output ports varies, depending on the intended application for the coupler. Types of fiber-optic couplers include optical splitters, optical combiners, X couplers, star couplers, and tree couplers.

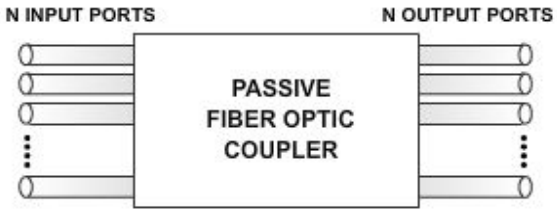

Figure 9-7 — Basic passive fiber optic coupler design.

Test your Knowledge (Select the Correct Response)

1. How many parts make up a fiber optic cable?

   A. 1
   B. 2
   C. 3
   D. 4

2.0.0 FIBER OPTICS ADVANCED

2.1.0 Fiber Optics

As stated earlier, a fiber optic data link had three basic functions:

- To convert an electrical input signal to an optical signal
- To send the optical signal over an optical fiber
- To convert the optical signal back to an electrical signal

The fiber-optic data link converts an electrical signal into an optical signal, permitting the transfer of data along an optical fiber. The fiber-optic device responsible for that signal conversion is a fiber-optic transmitter. A fiber-optic transmitter is a ***hybrid*** device. It

converts electrical signals into optical signals and launches the optical signals into an optical fiber. A fiber-optic transmitter consists of an interface circuit, a source drive circuit, and an optical source.

The interface circuit accepts the incoming electrical signal and processes it to make it compatible with the source drive circuit. The source drive circuit intensity modulates the optical source by varying the current through the source. An optical source converts electrical energy (current) into optical energy (light). Light emitted by an optical source is launched, or coupled, into an optical fiber for transmission.

Fiber-optic data link performance depends on the amount of optical power (light) launched into the optical fiber. This section provides an overview of optical sources and fiber optic transmitters.

2.1.1 Optical Source Properties

The development of efficient semiconductor optical sources, along with low-loss optical fibers, has led to substantial improvements in fiber-optic communications. Semiconductor optical sources have the physical characteristics and performance properties necessary for successful implementations of fiber-optic systems. Optical sources should do the following:

- Be compatible in size to low loss optical fibers by having a small light emitting area capable of launching light into fiber
- Launch sufficient optical power into the optical fiber to overcome fiber attenuation and connection losses, allowing for signal detection at the receiver
- Emit light at wavelengths that minimize optical fiber loss and dispersion. Optical sources should have a narrow spectral width to minimize dispersion
- Allow for direct modulation of optical output power
- Maintain stable operation in changing environmental conditions (such as temperature)
- Cost less and be more reliable than electrical devices, thereby permitting fiber optic communication systems to compete with conventional systems

Semiconductor optical sources suitable for fiber optic systems range from inexpensive light-emitting diodes (LEDs) to more expensive semiconductor lasers. Semiconductor LEDs and laser diodes (LDs) are the principal light sources used in fiber optics.

2.1.2 Semiconductor Light Emitting Diodes and Laser Diodes

Semiconductor LEDs emit ***incoherent light***. Spontaneous emission of light in semiconductor LEDs produces light waves that lack a fixed-phase relationship. Those light waves are referred to as incoherent light. LEDs are the preferred optical source for multimode systems because they can launch sufficient power at a lower cost than semiconductor laser diodes (LDs).

Semiconductor LDs emit coherent light, i.e., light waves having a fixed-phase relationship. Since semiconductor LDs emits more focused light than LEDs, they are able to launch optical power into both single mode and multimode optical fibers; however, LDs usually are used only in single mode fiber systems because they require more complex driver circuitry and cost more than LEDs.

Optical power produced by optical sources can range from microwatts (µw) for LEDs to tens of milliwatts (mw) for semiconductor LDs; however, it is not possible to couple all the available optical power effectively into the optical fiber for transmission.

The amount of optical power coupled into the fiber is the relevant optical power. It depends on the following factors:

- The angles over which the light is emitted
- The size of the light emitting area of the source relative to the fiber core size
- The alignment of the source and fiber
- The coupling characteristics of the fiber

Typically, semiconductor lasers emit light spread out over an angle of 10 to 15 degrees. Semiconductor LEDs emit light spread out at even larger angles. Coupling losses of several decibels (dB) can easily occur when coupling light from an optical source to a fiber, especially with LEDs.

2.1.3 Semiconductor Material

Understanding optical emission in semiconductor lasers and LEDs requires knowledge of semiconductor material and device properties. Providing a complete description of semiconductor properties is beyond the scope of this text. In this section, we will only discuss the general properties of semiconductor LEDs and LDs.

Semiconductor sources are diodes, with all of the characteristics typical of diodes except that their construction includes a special layer, called the active layer, that emits photons (light particles) when a current passes through it. The particular properties of the semiconductor are determined by the materials used and the layering of the materials within the semiconductor. Silicon (Si) and gallium arsenide (GaAs) are the two most common semiconductor materials used in electronic and electro-optic devices. In some cases, other elements, such as aluminum (Al), indium (In), or phosphorus (P), are added to the base semiconductor material to modify the semiconductor properties. These elements are called ***dopants***. Current flowing through a semiconductor optical source causes it to produce light.

LEDs generally produce light through spontaneous emission when a current passes through them. Spontaneous emission is the random generation of photons within the active layer of the LED. The emitted photons move in random directions. Only a certain percentage of the photons exit the semiconductor and are coupled into the fiber. Many of the photons are absorbed by the LED materials and the energy is dissipated as heat. This process causes the light output from an LED to be incoherent, have a broad spectral width, and have a wide output pattern.

Laser diodes are much more complex than LEDs. Laser is an acronym for Light Amplification by the Stimulated Emission of Radiation. Laser diodes produce light through stimulated emission when a current is passed through them. All types of lasers produce light by stimulated. In this process, in the laser diode, photons, initially produced by spontaneous emission, interact with the laser material to produce additional photons. This process occurs within the active area of the diode called the laser cavity.

As with the LED, not all of the photons produced are emitted from the laser diode. Some are absorbed and the energy dissipated as heat. The emission process and the physical characteristics of the diode cause the light output to be coherent, have a narrow spectral width, and have a narrow output pattern.

It is important to note that in both LED and laser diodes not all of the electrical energy is converted into optical energy. A substantial portion is converted to heat. Different LED and laser diode structures convert different amounts of electrical energy into optical energy.

2.1.4 Fiber Optic Transmitters

As stated previously, a fiber-optic transmitter is a hybrid electro-optic device. It converts electrical signals into optical signals and launches the optical signals into an optical fiber. A fiber-optic transmitter consists of an interface circuit, a source drive circuit, and an optical source. The interface circuit accepts the incoming electrical signal and processes it to make it compatible with the source drive circuit. The source drive circuit intensity modulates the optical source by varying the current through it. The optical signal is coupled into an optical fiber through the transmitter output interface.

Although semiconductor LEDs and LDs have many similarities, unique transmitter designs result from differences between LED and LD sources. Transmitter designs compensate for differences in optical output power, response time, linearity, and thermal behavior between LEDs and LDs to ensure proper system operation. Fiber-optic transmitters using LDs require more complex circuitry than transmitters using LEDs.

Transmitter output interfaces generally fall into two categories: optical connectors and optical fiber pigtails (*Figure 9-8*). Optical pigtails are attached to the transmitter optical source. This pigtail is generally routed out of the transmitter package as a coated fiber in a loose buffer tube or a single fiber cable. The pigtail is either soldered or epoxied to the transmitter package to provide fiber strain relief. The buffer tube or single fiber cable also is attached to the transmitter package to provide additional strain relief.

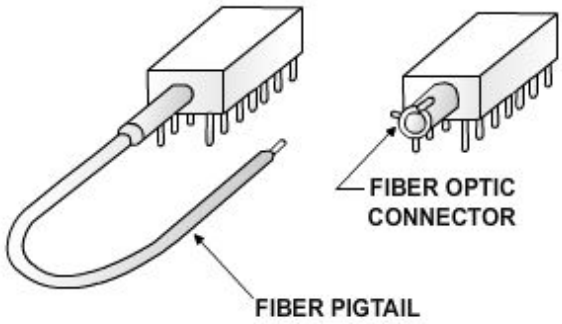

Figure 9-8 — Pigtailed and connectorized fiber optic devices.

The transmitter output interface may consist of a fiber-optical connector. The optical source may couple to the output optical connector through an intermediate optical fiber. , one end of which is attached to the source. The other end terminates in the transmitter optical output connector. The optical source may also couple to the output optical connector without an intermediate optical fiber. The optical source is placed within the transmitter package to launch power directly into the fiber of the mating optical connector. In some cases, lenses are used to more efficiently couple light from the source into the mating optical connector.

3.0.0 OPTICAL DETECTORS and FIBER OPTIC RECEIVERS

A fiber-optic transmitter is an electro-optic device capable of accepting electrical signals, converting them into optical signals, and launching those signals into an optical fiber. Scattering, absorption, and dispersion weaken and distort the signals propagating in the

fiber. The fiber-optic device responsible for converting the weakened and distorted optical signal back to an electrical signal is a fiber-optic receiver.

A fiber-optic receiver is an electro-optic device that accepts optical signals from an optical fiber and converts them into electrical signals. A typical fiber optic receiver consists of an optical detector, a low noise amplifier, and other circuitry used to produce the output electrical signal (*Figure 9-9*). The optical detector converts the incoming optical signal into an electrical signal. The amplifier then amplifies the electrical signal to a level suitable for further signal processing. The type of other circuitry contained within the receiver depends on the type of modulation used and the receiver's electrical output requirements.

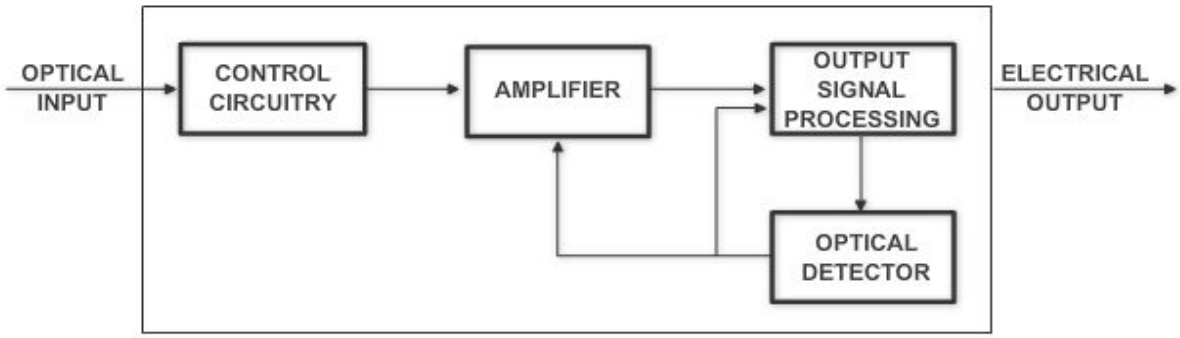

Figure 9-9 — Block diagram of a typical fiber optic receiver.

A ***transducer*** is a device that converts input energy of one form into output energy of another. An optical detector is a transducer that converts an optical signal into an electrical signal. It does this by generating an electrical current proportional to the intensity of incident optical radiation. The relationship between the input optical radiation and the output electrical current is given by the detector responsivity.

4.0.0 FIBER OPTIC SYSTEM TOPOLOGY

A point-to-point fiber-optic data link consists of three specific parts: an optical transmitter, an optical fiber, and an optical receiver. In addition, it includes any splices or connectors used to join individual optical fiber sections to each other and to the transmitter and receiver. *Figure 9-10* provides a schematic diagram of a point-to-point fiber-optic data link.

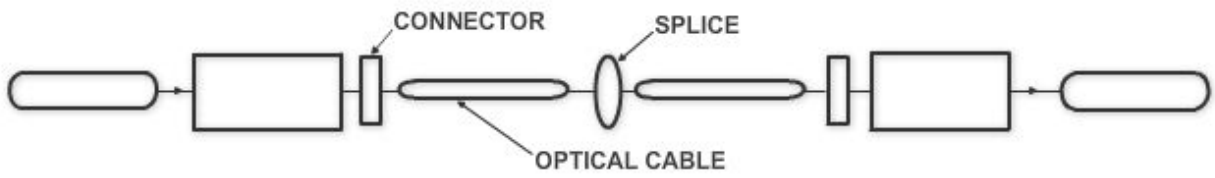

Figure 9-10 — A schematic diagram of a point to point fiber optic data link.

A common fiber-optic application is the full duplex link, which consists of two simple point-to-point links. These links transmit in opposite directions between the equipment. This application may be configured using only one fiber. If it is, fiber-optic splitters are used at each end to couple the transmit signal onto the fiber and receive signals to the detector.

All fiber-optic systems are simply sets of point-to-point fiber optic links. Different system topologies arise from the different ways that point-to-point fiber optic links can be connected between equipment. The term topology**,** as used here, refers to the configuration of various types of equipment and the fiber optic components interconnecting them. This equipment may be computers, workstations, consoles, or other equipment. Point-to-point links are connected to produce systems with linear bus, ring, star, or tree topologies. Point-to-point fiber optic links are the basic building block of all fiber optic systems.

5.0.0 FIBER OPTICS SYSTEM INSTALLATION

The Navy has a standard to provide detailed information and guidance to personnel concerned with the installation of fiber optic cables and cable plants. The fiber optic cable plant consists of all the fiber optic cables and the fiber optic interconnection equipment, including connectors, splices, and interconnection boxes. The fiber optic cable and cable plant installation standard consists of the following:

- Detailed methods for cable storage and handling, end sealing, repair, and splicing
- Detailed methods for fiber optic equipment installation and cable entrance to equipment
- Detailed methods to install fiber optic cables in cableways
- Detailed methods for installing fiber optic connectors and other interconnections, such as splices
- Detailed methods for testing fiber optic cable plants before, during, and after installation and repair

There are other standards that discuss fiber optic system installation. Many of these standards incorporate procedures for repair, maintenance, and testing. The techniques developed for installing fiber optic hardware are not much different than for installing

hardware for copper-based systems: however, the primary precautions that need to be emphasized when installing fiber optic systems are as follows:

- Optical fibers or cables should never be bent at a radius of curvature less than a certain value, called the minimum bend radius. Bending an optical cable at a radius smaller than the minimum bend radius causes signal loss.
- Fiber optic cables should never be pulled tight or fastened over or through sharp comers or cutting edges. Extremely sharp bends increase the fiber loss and may lead to fiber breakage.
- Fiber optic connectors should always be cleaned before mating. Dirt in a fiber optic connection will significantly increase the connection loss and may damage the connector.
- Precautions must be taken so the cable does not become kinked or crushed during installation of the hardware. Extremely sharp kinks or bends increase the fiber loss and may lead to fiber breakage.

6.0.0 FIBER OPTIC MEASUREMENTS

Fiber optic data links operate reliably if fiber optic component manufacturers and you perform the necessary laboratory and field measurements. Manufacturers must test how component designs, material properties, and fabrication techniques affect the performance of fiber-optic components. These tests can be categorized as design tests or quality control tests. Design tests are conducted during the development of a component. Design tests measure the performance of the component (optical, mechanical, and environmental) in the intended application. Once the performance of the component is characterized, the manufacturer generally conducts only quality control tests. Those tests verify that the parts produced are the same as the parts on which the design tests were conducted. When manufacturers ship fiber optic components, they provide quality control data detailing the results of measurements performed during or after fabrication of the component.

You, as the installer, should measure some of these parameters upon receipt before installing the component into the fiber optic data link. These tests determine if the component has been damaged in the shipping process. In addition, measure some component parameters after installing or repairing fiber optic components in the field. Compare the values you obtain to the system installation specifications. These measurements determine if the installation or repair process has degraded the performance of the component and will affect data link operation.

6.1.0 Field Measurements

Field measurements measure the transmission properties of installed fiber optic components. You must perform field measurements to evaluate those properties most likely affected by the installation or repair of fiber optic components or systems.

This discussion on field measurements is limited to optical fiber and optical connection properties. Optical fiber and optical connection field measurements evaluate only the transmission properties affected by component or system installation or repair. Because optical fiber geometrical properties, such as core and cladding diameter and numerical aperture, are not expected to change, there is no need to remeasure these properties. The optical connection properties that are likely to change are connection insertion loss and reflectance and return loss.

Field measurements require rugged, portable test equipment, unlike the sophisticated test equipment used in the laboratory. Field test equipment must provide accurate measurements in extreme environmental conditions. Since electrical power sources may not always be available in the field, test equipment should allow battery operation. In addition, while both fiber ends are available for conducting laboratory measurements, only one fiber end may be readily available for field measurements. Even if both fiber ends are available for field measurements, the fiber ends are normally located some distance apart, requiring two people to perform the measurements.

The main field measurement technique involves optical time domain reflectometry (*Figure 9-11*). An optical time domain reflectometer (OTDR) is recommended for conducting field measurements on installed optical fibers or links of 50 meters or more in length. An OTDR requires access to only one fiber end. It measures the ***attenuation*** of installed optical fibers as a function of length, identifies and evaluates optical connection losses along a cable link, and locates any fiber breaks or faults.

Figure 9-11 — Optical time domain reflectometer.

Users also can measure fiber attenuation and cable plant transmission loss, using an optical power meter and a stabilized light source. Use this measurement technique when optical time domain reflectometry is not recommended. Measurements obtained with a stabilized light source and power meter are more accurate than those obtained with an OTDR. Measuring fiber attenuation and transmission loss using a power meter and light source requires access to both ends of the fiber or link. An optical loss test set (OLTS) combines the power meter and source functions into one physical unit.

6.2.0 Optical Time Domain Reflectometry

Use optical time domain reflectometry to characterize optical fiber and optical connection properties in the field. In optical time domain reflectometry, an OTDR transmits an optical pulse through an installed optical fiber. The OTDR measures the fraction of light that is reflected back. By comparing the amount of light the OTDR scatters back at different times, you can determine fiber and connection losses. When several fibers are connected to form an installed cable plant, the OTDR can characterize optical fiber and optical connection properties along the entire length of the plant. A fiber optic cable plant consists of optical fiber cables, connectors, splices, mounting panels, jumper cables, and other passive components. It does not include active components, such as optical transmitters or receivers.

The OTDR displays the backscattered and reflected optical signal as a function of length. The OTDR plots half the power in decibels (dB) versus half the distance. Plotting half the power in dB and half the distance corrects for round-trip effects. By analyzing the OTDR plot, or trace, you can measure fiber attenuation and transmission loss between any two points along the cable plant. You also can measure insertion loss and reflectance of any optical connection. In addition, use the OTDR trace to locate fiber breaks or faults. *Figure 9-12* shows an example OTDR trace of an installed cable plant.

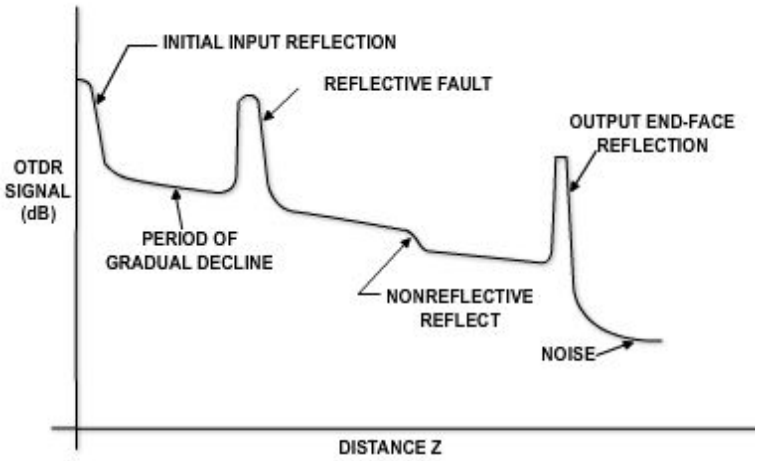

Figure 9-12 — OTDR trace of an installed cable plant.

7.0.0 MECHANICAL and FUSION SPLICES

Mechanical splicing methods use mechanical fixtures to align and connect optical fibers and may involve either passive or active core alignment. Active core alignment produces a lower loss splice than passive alignment; however, passive core alignment methods can produce mechanical splices with acceptable loss measurements even with single mode fibers.

In the strictest sense, a mechanical splice is a permanent connection made between two optical fibers. Mechanical splices hold the two optical fibers in alignment for an indefinite period of time without movement. The amount of splice loss is stable over time and unaffected by changes in environmental or mechanical conditions.

The types of mechanical splices used for mechanical splicing include glass, plastic, metal, and ceramic tubes; also included are V-groove and rotary devices. Materials that assist mechanical splices in splicing fibers include transparent adhesives and index matching gels. Transparent adhesives are epoxy resins that seal mechanical splices and provide index matching between the connected fibers.

7.1.0 Glass or Ceramic Alignment Tube Splices

Mechanical splicing may involve the use of a glass or ceramic alignment tube or ***capillary.*** The inner diameter of this glass or ceramic tube is only slightly larger than the outer diameter of the fiber. A transparent adhesive, injected into the tube, bonds the two fibers together. The adhesive also provides index matching between the optical fibers. *Figure 9-13* illustrates fiber alignment using a glass or ceramic tube. This splicing technique relies on the inner diameter of the alignment tube. If the inner diameter is too large, splice loss will increase because of fiber misalignment. If the inner diameter is too small, it is impossible to insert the fiber into the tube.

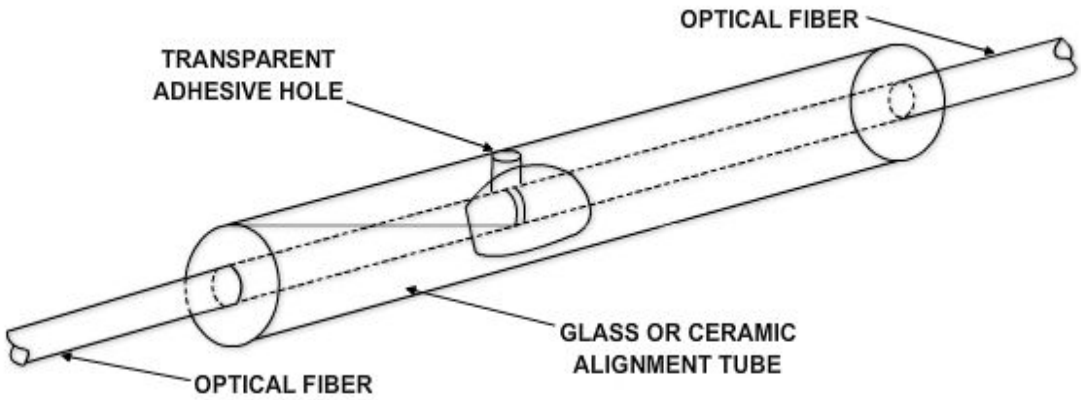

Figure 9-13 — Glass or ceramic alignment tube for mechanical splicing.

7.2.0 V – Grooved Splices

Mechanical splices also may use either a grooved ***substrate*** or positioning rods to form suitable V-grooves for mechanical splicing. The basic V-grooved device relies on an open-grooved substrate to perform fiber alignment. When you are inserting the fibers into the grooved substrate, the V-groove aligns the cladding surface of each fiber end. A transparent adhesive makes the splice permanent by securing the fiber ends to the grooved substrate. *Figure 9-14* illustrates this type of open V-grooved splice.

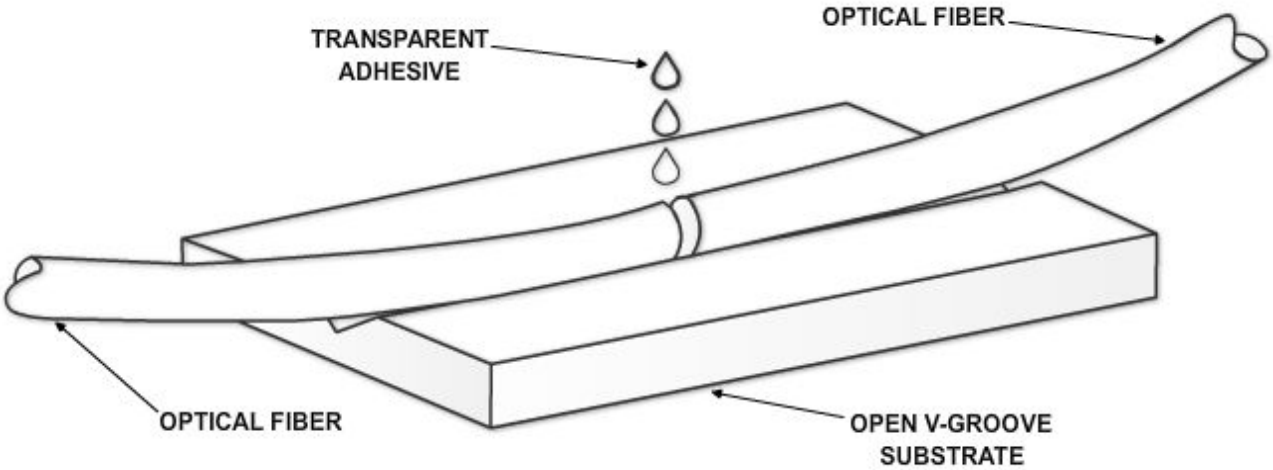

Figure 9-14 — Open V – grooved splice.

V-grooved splices may involve sandwiching the butted ends of two prepared fibers between a V-grooved substrate and a flat, glass plate. Additional V-grooved devices use two or three positioning rods to form a suitable V-groove for splicing. The V-grooved device that uses two positioning rods is the spring V-grooved splice. This splice uses a groove formed by two rods positioned in a bracket to align the fiber ends. The diameter of the positioning rods permits the outer surface of each fiber end to extend above the groove formed by the rods. A flat spring presses the fiber ends into the groove that maintains fiber alignment. Transparent adhesive completes the assembly process by bonding the fiber ends and providing index matching. *Figure 9-15* is an illustration of the spring V-grooved splice. A variation of this splice uses a third positioning rod instead of a flat spring. The rods are held in place by a heat-shrinkable band or tube.

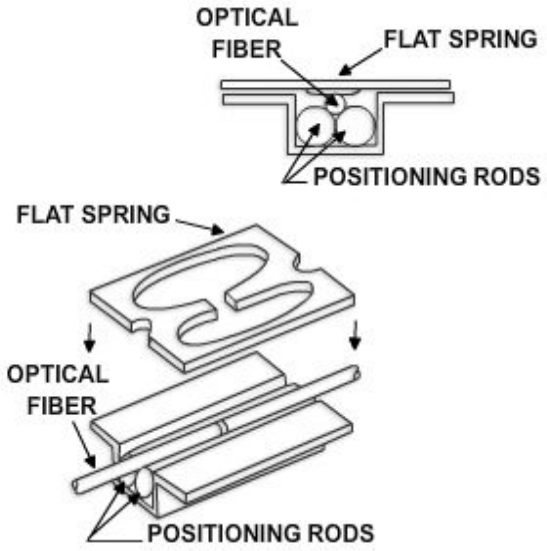

Figure 9-15 — Spring V – grooved mechanical splice.

7.3.0 Rotary Splices

In a rotary splice, the fibers are mounted into a glass ***ferrule*** and secured with adhesives. The splice begins as one long glass ferrule that is broken in half during the assembly process. A fiber is inserted into each half of the tube and epoxied in place, using an ultraviolet cure ***epoxy***. The end face of the tubes is then polished and placed together, using the alignment sleeve. *Figure 9-16* is an illustration of a rotary mechanical splice. The fiber ends retain their original orientation and have added mechanical stability since each fiber is mounted into a glass ferrule and alignment sleeve. The rotary splice may use index matching gel within the alignment sleeve to produce low-loss splices.

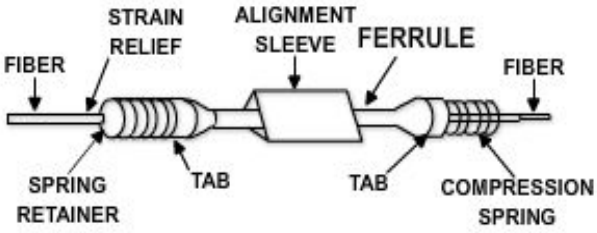

Figure 9-16 — Rotary mechanical splice.

7.4.0 Fusion Splices

The process of fusion splicing involves using localized heat to melt or fuse the ends of two optical fibers together. The splicing process begins by preparing each fiber end for fusion. Fusion splicing requires that all protective coatings be removed from the ends of each fiber. The fiber is then ***cleaved***, using the score-and-break method. The quality of each fiber end is inspected with a microscope. In fusion splicing, splice loss is a direct function of the angles and quality of the two fiber end faces.

The basic fusion-splicing apparatus consists of two fixtures on which the fibers are mounted and two electrodes. *Figure 9-17* shows a basic fusion-splicing apparatus. An inspection microscope assists in the placement of the prepared fiber ends into a fusion splicing apparatus. The fibers are placed into the apparatus, aligned, and then fused together. Initially, fusion splicing used nichrome wire as the heating element to melt or fuse fibers together. New fusion splicing techniques have replaced the nichrome wire with carbon dioxide (CO2) lasers, electric arcs, or gas flames to heat the fiber ends, causing them to fuse together. The small size of the fusion splice and the development of automated fusion-splicing machines have made electric arc fusion (arc fusion) one of the most popular splicing techniques.

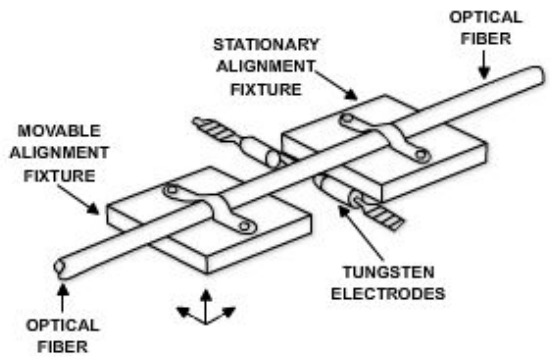

Figure 9-17 — Basic fusion splicing apparatus.

7.5.0 Multi Fiber Splices

Normally, multi fiber splices are only installed on the ribbon type of fiber-optic cable. Multi fiber splicing techniques can use arc fusion to restore connection, but most splicing techniques use mechanical splicing methods. The most common mechanical splice is the ribbon splice.

A ribbon splice uses an etched silicon chip, or grooved substrate, to splice the multiple fibers within a flat ribbon. The spacing between the etched grooves of the silicon chip is equal to the spacing between the fibers in the flat ribbon. Before placing each ribbon on the etched silicon chip, cleave each fiber within the ribbon cable. Place all of the fibers into the grooves and hold them in place with a flat cover. Typically, you will use an index matching gel to reduce the splice loss. *Figure 9-18* shows the placement of the fiber ribbon on the etched silicon chip.

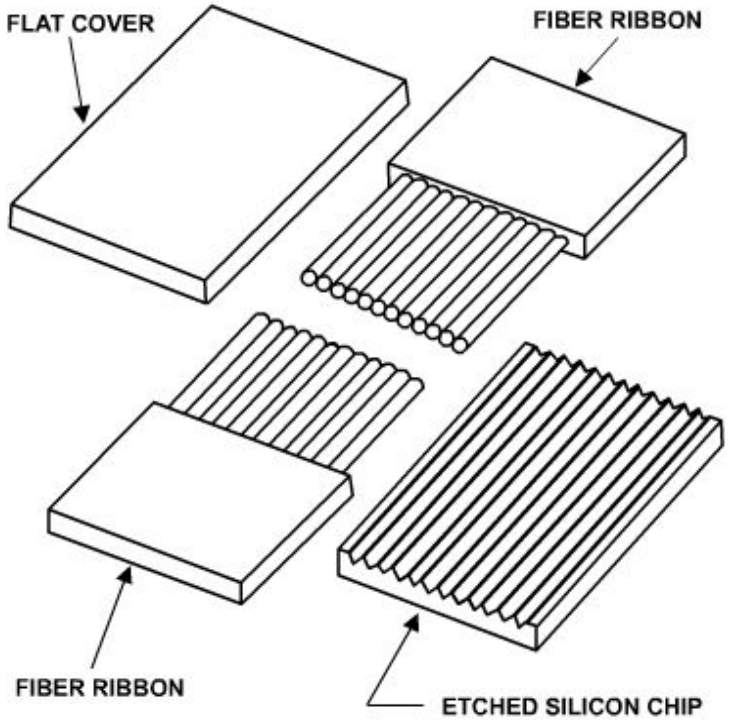

Figure 9-18 — Ribbon splice on etched silicon chip.

Test your Knowledge (Select the Correct Response)

2. Which of the following is NOT part of a point-to-point fiber-optic data link?

   A. Optical transmitter
   B. Optical fiber
   C. Optical receiver
   D. Optical amplifier

8.0.0 PUBLIC ADDRESS SYSTEM

The type of public address system that you will install, maintain, and troubleshoot is intended for installation in administrative and living quarter areas. This system will be used for general announcements, for indoor talk-back paging, and to entertain or address personnel.

A common system authorized by the General Services Administration (GSA) consists of one 100-watt solid state amplifier, four trumpet speakers with drivers, two paging speakers, one dynamic microphone with floor stand, and all accessory terminal fittings and hardware required to operate this system. The set will conform to the design and functional test requirements of Underwriters Laboratory (UL) 813 Standard and the wiring and design requirements of the National Fire Protection Association (NFPA) 70®, National Electrical Code® (NEC©).

8.1.0 Installation

Before installing a public address system, refer to the NEC© and the manufacturers' recommendations. Several factors must be met for the permanent or temporary installation of a public address (PA.) system.

We will now discuss these factors, consisting of an amplifier (console), speakers, and cable that are approved for this system.

8.1.1 Amplifier

The solid-state amplifier comes with an AC power cord that is terminated in a three-prong plug. The power cord must be plugged into a three wire, 120 volt, 60- hertz grounded outlet. The cord will ground the amplifier and the auxiliary power receptacle. The auxiliary power receptacle is a three wire grounded outlet that supplies power to accessory sound equipment. The receptacle will supply power only as long as the amplifier is connected to a 120 volt power source and turned on.

The amplifier will be internally wired with a circuit breaker for protection. If the breaker trips, turn off the amplifier and reset the circuit breaker. Turn on the amplifier, and, if the breaker trips again, do not attempt to reset it. A problem exists that you will need to investigate and correct.

8.1.2 Speakers

The speakers will be weatherproof and have adjustable mounting brackets. The input impedance of the speakers will match the amplifier output with a low frequency cutoff, as shown in *Figure 9-19*.

The output speaker voltage will be either 25 or 70.7 volts. The speaker will have microphone precedence over other input signals and four output terminals with circuit protection.

Speaker installation is an important element of installing a PA system. No matter how good the amplifier is, if the speaker is not installed properly, the sound it produces will be inadequate. There are a number of factors you must consider when you install speakers. The placement and connection of speakers is the most important step. For indoor systems, there are two types of placement. The speakers may be placed flat against a wall and turned so that they will radiate sound at an angle from the wall. The other type of placement is to mount the speakers in the corners of a room; for example, alcoves, balconies, booths, and dividing walls. A variation of these two methods mentioned above may be considered for installation. For outdoor systems, the main considerations are the area to be covered and the direction of sound. Highly directive trumpet speakers are normally used for an outdoor area.

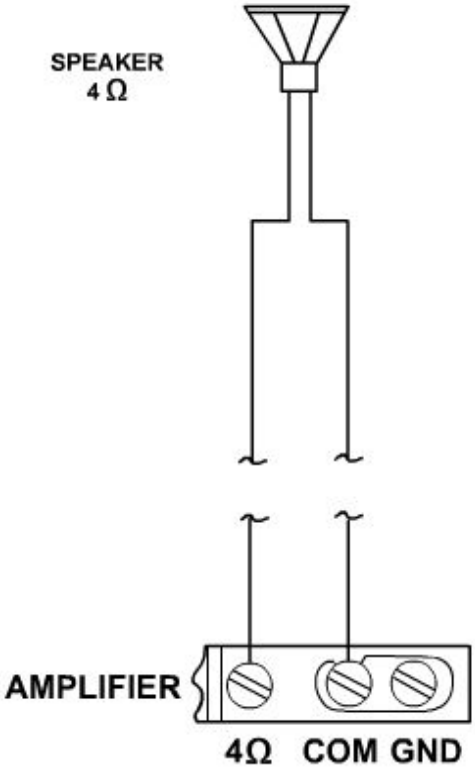

Figure 9-19 — Total speaker impedance matches the output impedance of the amplifier.

When connecting speakers together, you must consider impedance matching and phase relations. Mismatching the impedance of a speaker to an amplifier output in upward manner will produce different effects than mismatching them in a downward manner. Mismatching upward (connecting an 8-ohm speaker to the 4-ohm output) will affect the power delivered to the speaker. Power loss will be about proportional to the upward impedance mismatch; in this case, about 50 percent. As a general rule, no serious frequency response deficiency will be noted and this mismatch cannot damage a well-designed amplifier. Always avoid mismatching downward (connecting a 4-ohm speaker to an 8-ohm output). It will reduce the amplifier power output and cause an overload on the output side with possible damage to the amplifier.

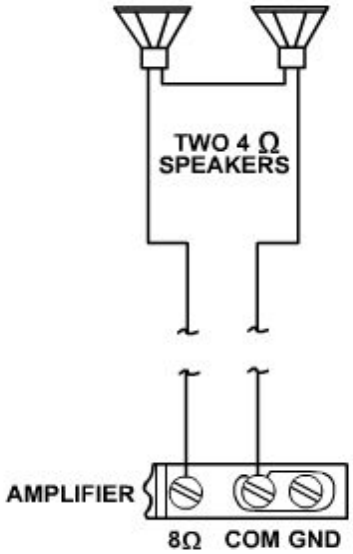

Figure 9-20 — Two speakers connected in series.

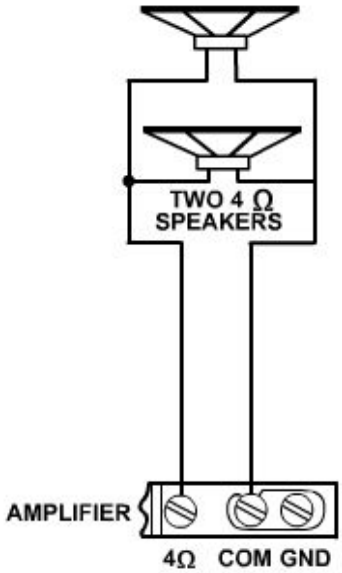

Figure 9-21 — Matching two speakers connected in parallel.

Figure 9-20 shows an example of two speakers connected in series. Add the individual speaker impedances together to obtain the total matching impedance.

For parallel connection (*Figure 9-21*) add the reciprocal of the individual speaker impedances together to obtain the reciprocal of the total matching impedance.

For series/parallel connections, combine the two formulas as the speaker connections indicate; for example, see *Figure 9-22*, and apply the series formula for A and B, then for C and D. Take the results of this and apply the parallel formula to obtain the final matching impedance.

When you use more than one speaker in a sound system installation, phase the speakers to reduce the cancellation effect, as shown in *Figure 9-23.* Speakers out of phase will lose up to one half of their normal volume and operate with degraded tone quality.

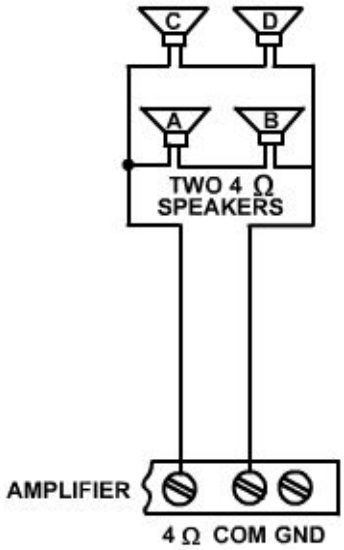

Figure 9-22 — Matching four speakers connected in a series parallel configuration.

Speakers facing in the same general direction are in phase when their respective diaphragms move in the same direction. This is achieved by connecting the speakers + to + and - to -. Speakers facing each other are in phase when their respective diaphragms move in opposite directions. This is achieved by connecting the speakers + to - and - to +.

Efficient transfer of power from the amplifier to the speakers is the prime consideration in sound system connections. Basically, there are two methods of connection. In one the connection runs from the amplifier directly to the speaker voice coils. In the other the connection runs from the amplifier to the speaker voice coils through a transformer.

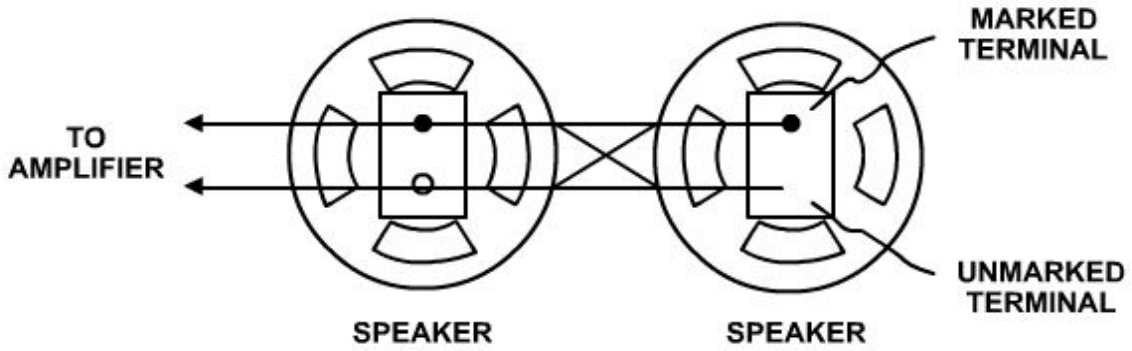

Figure 9-23 — Phasing speakers facing in the same and opposite directions.

Use the first method with short runs (not over 200 feet) of wire and a simple speaker arrangement with low impedances. Use the second method whenever you note a 15 percent power loss in the transmission lines, when wire runs are more than 200 feet, or when there is a complex speaker arrangement. Constant voltage transformers are most commonly used for this purpose, although impedance matching transformers may be used. For an in-depth look, refer to NEETS, Module 8, *Introduction to Amplifiers.*

8.1.3 Cable

Cable installations are just as important as the other component installations. The cable used should be recommended by the manufacturer and in compliance with the NEC©. For the best results in sound, use a two conductor shielded cable.

In complex systems where the input lines are run in close proximity to the speaker lines for long distances, currents in the speaker lines may be picked up by the input lines. When these stray currents are fed back to the amplifier, cross talk and hum can result, or the amplifier may oscillate. Because of this, balanced line connections are recommended when long input and speaker lines are run close together. A balanced line is achieved by ungrounding the common terminal, leaving the outputs floating. Any current that develops on one side of the line and is offset by an equal and opposite current on the other side is called a balanced line. This reduces the possibility of creating stray currents in nearby input lines.

If you encounter hum with a balanced line, you may need to run a shielded two conductor cable to the speakers and ground the cable at the amplifier.

8.2.0 Maintenance and Repair

Even the best designed and built equipment occasionally develops faults. Many factors can cause faults: moving equipment, atmospheric conditions, and the age of the equipment, just to name a few. Develop a preventive maintenance schedule that requires a set routine of periodic tests, checks, and inspections to head off trouble before it develops.

When repairing a PA. system, always follow the manufacturers' recommendations and guidelines. Replacing faulty parts with the exact replacement parts is always the correct procedure.

Trouble in PA systems is often caused by nothing more than a loose connection or a break in the cable shield. Check for simple faults of this type before you begin a lengthy test of the system.

The identification and location of serious troubles in a system may require the use of signal-tracing equipment, such as an audio-signal generator, a meter, or an oscilloscope. When you test the electrical circuit, the most important point to remember is that you need to pinpoint the location of the trouble. A careful study of the circuit diagram is essential.

Two problems that cause defects in PA systems are poor solder connections and loose mechanical connections. When checking solder connections, make certain that both metals are absolutely clean and that the completed soldering job is firm and durable. Faulty soldering in PA systems can cause defects that are difficult to identify and locate. Too much solder can cause shorts, which may not be visible, in microphone connections.

Mechanical connections are easy to check; just ensure that all connections with a mechanical connector are tight. This type of connector will be found in the rear of the amplifier or in the console and speakers.

Test your Knowledge (Select the Correct Response)

3. Which of the following Underwriters Laboratory (UL) Standards apply for design and test requirements of a PA system?

   A. UL 80
   B. UL 813
   C. UL 832
   D. UL 889

9.0.0 INTEROFFICE COMMUNICATION SYSTEMS

An interoffice communication system is used to transmit orders and information among offices that are only a short distance apart. Frequently, such offices are in the same building. When you use an interoffice communication system, you are responsible for the installation and maintenance of the system.

9.1.0 Configurations

An intercom system consists of two basic configurations: the all master system and the single master multiple remote system.

With the all master system, any station can call any other station or several stations can be connected together for a conference.

With the single master multiple remote system, the single master station can selectively call any remote station, and any remote can call the master station.

9.2.0 Components

Basically, an intercom system consists of one or more stations, a junction box, one or more remote speaker units, and the wire necessary to make the connections.

The basic parts of a master station are a speaker-microphone, a selector switch panel, a combination volume control, ON/OFF switch, a pilot light, and a listen-talk switch, all of which are mounted in a cabinet.

The basic parts of a remote speaker unit are a speaker-microphone, a push switch for signaling the master, and a terminal board for interconnection to the master station.

9.3.0 Master and Remote Station Installation

You can install an intercom system easily if you follow the manufacturers' instructions and the NEC© guidelines.

You can use any combination of master stations and remote stations up to the capacity of the master station. Where it is not necessary for remote stations to communicate among themselves, you should usually install only one master station.

Install the master station within reach of a 120-volt, 60-hertz AC power outlet. The master station and the remote stations should be installed on the desk or in the working spaces of the personnel who will use them. If some of the units are to be installed outdoors, take the necessary precautions to protect them from adverse weather conditions.

The size of cable to be used in making connections between units is governed by the length of wire and the type of system you install. The maximum wire resistance permissible will be stated in the operating instructions of the manufacturer's literature. Component and cable installation will depend on the type of system to be installed.

After installing the cable, check the resistance with an ohmmeter. Make certain that the maximum permissible resistance is not exceeded and that there are no opens, grounds, or shorts.

NOTE

Always follow the installation instructions that come with each system.

9.4.0 Maintenance of Interoffice Communications Systems

In general there are four basic steps in intercom maintenance: inspect, tighten, clean, and adjust. Inspection is always of primary importance.

The components in an intercom system are readily accessible and, for the most part, can be replaced when faulty.

With the solid-state devices of today, all maintenance programs are basically the same. One of the first and the most important actions you must take when performing maintenance on any intercom system is to consult the manufacturers' recommendations and guidelines.

Common troubles within an intercom system are normally nothing more than loose connections or breaks in the cable. If a component should need replacement, be sure to replace it with the manufacturer's suggested component.

10.0.0 AREA LIGHTING SYSTEMS

Street lighting at naval facilities usually need not produce as high a level of illumination as that required in many municipal areas. Because night activity by vehicles and pedestrians is low, only enough light is supplied to permit personnel to identify streets and buildings and to furnish sufficient visibility for local security requirements.

When properly constructed and installed, base or camp wide lighting systems will provide years of trouble-free operation with a minimum of minor maintenance and bulb changing required to keep the system fully operational.

Several factors can change the base or camp requirements for area lighting. These factors include changes in facility usage, updating of systems, changes in the base or camp mission, or expansion of existing systems.

With the cost of energy rising daily, any system that can provide a higher level of efficiency for the energy used must be considered. The use of the newer high pressure discharge systems for lighting seems to offer savings both in the lifespan of the bulbs and in the lumens per watt of energy used. These systems are replacing the older incandescent systems at an increasing pace. The higher initial cost of these systems is offset by the efficiency of the energy used and savings of energy dollars.

10.1.0 Terminology and Definitions

You will need an understanding of lighting techniques and effects to understand the physical concepts and terminology involved in lighting systems. We will use both the American Standard (AS) and the metric system (SI) when discussing lighting concepts. The AS standards will be without brackets, whereas the SI terms will be noted in square brackets [ ].

The candlepower [candela], abbreviated cp [cd], is the unit of luminous intensity. It is comparable to the voltage in an electrical circuit and represents the force that generates the light you can see. An ordinary wax candle has a luminous intensity of approximately one candlepower [candela], hence the name (*Figure 9-24*).

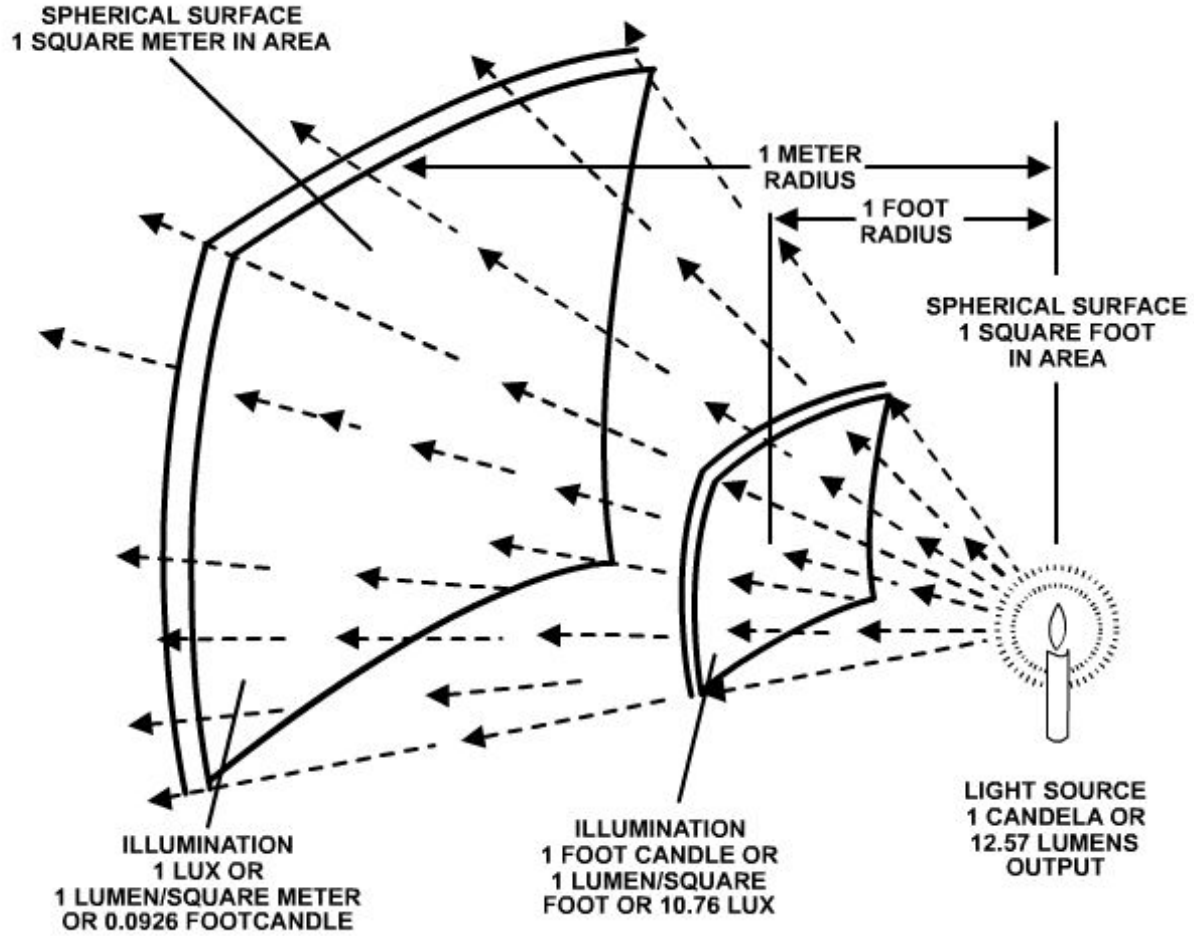

Figure 9-24 — Relationship between a light source of one candlepower and the illumination produced.

A candle radiates light equally in all directions. If you imagine such a source surrounded by a transparent sphere of one foot radius then by definition, the amount of luminous energy (***flux***) emanating from one square foot [meter] of surface on the sphere is one ***lumen*** [lumen], abbreviated lm.

Since there are 40 square feet [meters] of surface area in such a sphere, it follows that a source of one candlepower [candela] intensity produces 40 or 12.57 lm (a lumen is a unit of light quantity), and in terms of power is equal to 0.0015 watt. It therefore also follows that 1-cp [cd] source produces 12.57 times 0.0015 watt; that is, 0.0189 watt or approximately 1/50 watt of luminous energy. The lumen, as luminous flux, or quantity of light, is comparable to the flow of current in an electrical circuit.

One lumen of luminous energy occurrence on one square foot of area produces an illumination of one foot candle (fc). When the area is expressed in square meters, the illumination is expressed in lux (lx). If you were to consider a light bulb to be comparable to a sprinkler head, then the amount of water released would be the lumens and the amount of water per square foot (meter) of floor area would be the foot candles [lux]. The metric unit, lux, is smaller than the corresponding unit, by a ratio of approximately 10 to 1. In order to change foot candle to lux, you would multiply by 10.764.

$$footcandles = \frac{lumens}{square\ \ feet\ of\ \ area}$$

Or

$$lux = \frac{lumens}{square\ meter\ of\ \ area}$$

10.1.1 High Intensity Discharge Lighting

Efforts to improve power efficiency and reduce maintenance costs led to the development of a new family of lighting generally categorized as high intensity-discharge lamps (HID). These lamps all have a negative-resistance characteristic. This means that the resistance decreases as the lamps heat up. As the resistance decreases, the current increases. In fact, the current will increase indefinitely unless a current limiting device is provided. All gaseous conduction HID lamps, therefore, have current limiters, called ballasts**.** Longer lamp life and more light per watt are the two main advantages that HID lamps have over incandescent bulbs. There are three basic types of HID lamps used in area lighting: mercury lamps, metal halide lamps, and high pressure sodium lamps. All high intensity-discharge lamps produce light from an arc tube that is usually contained in an outer glass bulb.

Figure 9-25 shows the basic configuration of a HID lamp. In these lamps, a material, such as sodium, mercury, or metal halide, is added to the arc tube. In design, the lamp has three electrodes, one acting as a cathode, one as an anode, and the other used for starting. The arc tube contains small amounts of pure argon gas, halide salts, sodium, and vapor to aid in starting. Free electrons are accelerated by the starting voltage. In this state of acceleration, these electrons strike atoms and displace other electrons from their normal atomic positions. Once the discharge begins, the enclosed arc becomes the light source.

Commercial companies that produce these light bulbs claim a 100-percent increase in lamp life over tungsten filament bulbs that produce the same amount of light. The power in watts required to operate these lamps is less than one half that required for filament lamps. The initial cost of the components for lights is substantially greater, as these lights will require ballasts; however, this cost can be made up later by the savings of energy costs. The selection of lighting fixtures will depend on budgeted dollars for new installation projects versus maintenance dollars.

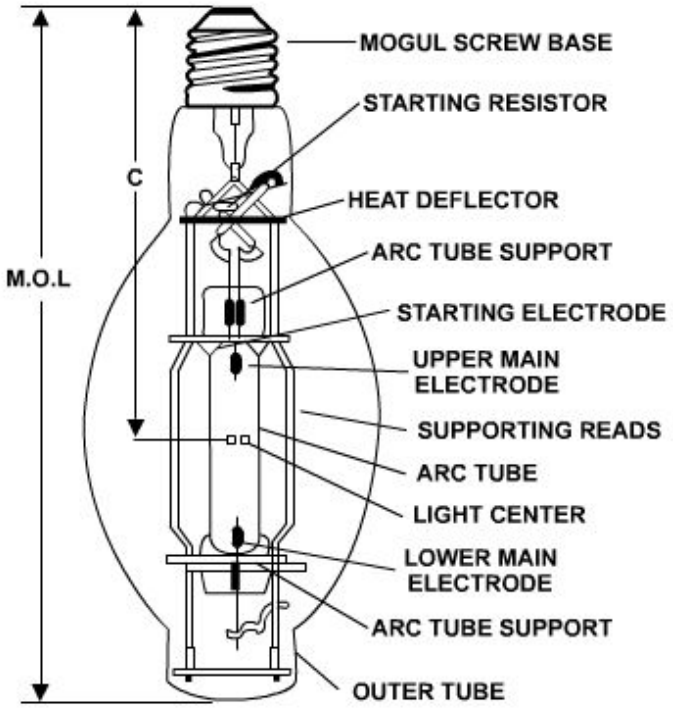

Figure 9-25 — HID lamp configuration.

Most discharge lighting fixtures are supplied with the required ballast installed in the fixture. In some cases ballasts, usually called transformers, are externally installed.

10.1.2 High Pressure Mercury Lamps

This lamp consists of a quartz arc tube sealed within an outer glass jacket or bulb. The inner arc tube is made of quartz to withstand the high temperatures that result when the lamp builds up to normal wattage. Two main electron emissive electrodes are located at opposite ends of the tube; these are made of coiled tungsten wire. Near the upper main electrode is a third, or starting, electrode in series with a ballasting resistor and connected to the lower main electrode lead wire. *See Figure 9-26*.

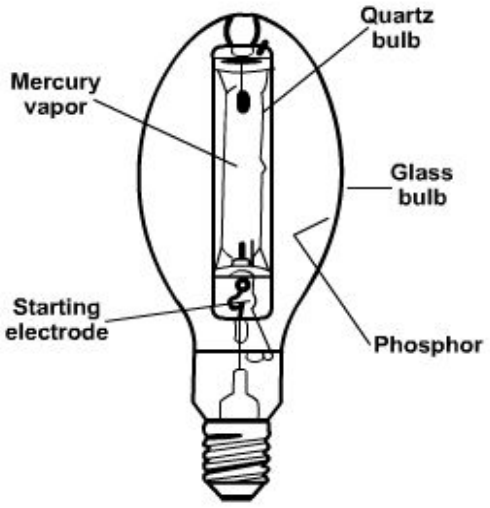

Figure 9-26 — High pressure mercury lamps.

The arc tube in the mercury lamp contains a small amount of pure argon gas that is vaporized. When voltage is applied, an electric field is set up between the starting electrode and the adjacent main electrode. This ionizing potential causes current to flow, and, as the main arc strikes, the heat generated gradually vaporizes the mercury. When the arc tube is filled with mercury vapor, it creates a low-resistance path for current to flow between the main electrodes. When this takes place, the starting electrode and its high-resistance path become automatically inactive.

Once the discharge begins, the enclosed arc becomes a light source with one electrode acting as a cathode and the other as an anode. The electrodes will exchange functions as the ac supply changes polarity.

The quantity of mercury in the arc tube is carefully measured to maintain quite an exact vapor pressure under design conditions of operation. This pressure differs with wattage sizes, depending on arc-tube dimensions, voltage-current relationships, and various other design factors.

Efficient operation requires the maintenance of a high temperature of the arc tube. For this reason, the arc tube is enclosed in an outer bulb made of heat resistant glass that makes the arc tube less subject to surrounding temperature or cooling by air circulation. About half an atmosphere of nitrogen is introduced into the space between the arc tube and the outer bulb. The operating pressure for most mercury lamps is in the range of two to four times the atmospheric pressure. Lamps can operate in any position; however, light output decreases when they are burned in positions other than vertical. Mercury lamps for lighting applications range in wattage from 40 to 1,000 watts. The 175 and 400 watt types are the most popular. Mercury lamps are used in street lighting, security lighting, and outdoor area lighting. In new installations, mercury lamps are being replaced with more efficient metal halide or high-pressure sodium systems.

10.1.3 Metal Halide Lamps

Halide lamps are similar to mercury lamps in construction. The lamp consists of a quartz arc tube mounted within an outer glass bulb; however, in addition to mercury, the arc tubes contain halide salts, usually sodium iodide and scandium iodide. During lamp operation, the heat from the arc discharge evaporates the iodide along with the mercury. The result is an increase in efficiency of approximately 50 percent over that of a mercury lamp of the same wattage, as well as excellent color quality from the arc. See *Figure 9-27*.

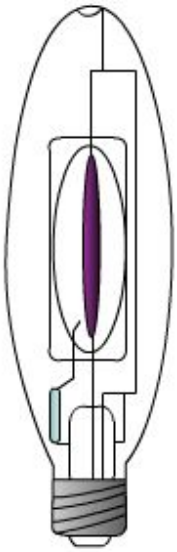

Figure 9-27 — Metal halide lamps.

The amount of iodide vaporized determines lamp efficiency and color and is temperature-dependent. Metal halide arc tubes have carefully controlled seal shapes to maintain temperature consistency between lamps. In addition, one or both ends of the arc tube are coated to maintain the desired arc tube temperature. There is some color variation between individual metal halide lamps owing to differences in the characteristics of each lamp.

Metal halide lamps use a starting electrode at one end of the arc tube that operates in the same manner as the starting electrode in a mercury lamp. A bimetal shorting switch is placed between the starting electrode and the adjacent main electrode. This switch closes during lamp operation and prevents a small voltage from developing between the two electrodes, which, in the presence of the halides, could cause arc-tube seal failure.

10.1.4 High Pressure Sodium Lamps

The high pressure sodium lamp, commonly referred to as HPS, has the highest light producing efficiency of any commercial source of white light. Like most other high intensity-discharge lamps, high pressure sodium lamps consist of an arc tube enclosed within an outer glass bulb. The arc operates in a sodium vapor at a temperature and pressure that provide a warm color with light in all portions of the visible spectrum at a high efficiency. Owing to the chemical activity of hot sodium, quartz cannot be used as the arc-tube material; instead, high pressure sodium arc tubes are made of an alumina ceramic (polycrystalline alumina oxide) that can withstand the corrosive effects of hot sodium vapor. See *Figure 9-28*.

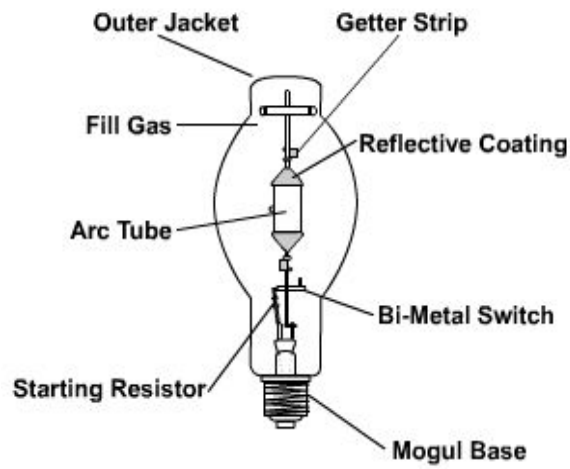

Figure 9-28 — High pressure sodium lamps.

There are coated tungsten electrodes sealed at each end of the arc tube. The sodium is placed in the arc tube in the form of a sodium-mercury amalgam that is chemically inactive. The arc tube is filled with xenon gas to aid in starting.

High pressure sodium lamps are available in sizes from 35 to 1,000 watts. They can be operated in any burning position and have the best lumen maintenance characteristic of the three types of HID lamps. Except for the 35 watt lamp, most high-pressure sodium lamps have rated lives of more than 24,000 hours. The 35 watt lamp has a rated life of 16,000 hours. The 50, 70, and 150 watt sizes are available in both a mogul base and a medium base design.

10.1.5 Fluorescent Lighting

Fluorescent lamps of high pressure, hard glass are used to some extent for floodlighting where a low level, highly diffused light is desired. This would include club parking lots, outside shopping areas, parks, or grass areas. This bulb is much the same in operation as the mercury vapor lamp except that the fluorescent tube has an inside coating of material called phosphor that gives off light when bombarded by electrons. In this case, the visible light is a secondary effect of current flow through the lamp. Just like the HID lamps, the fluorescent lamp requires ballast for operation. The color produced by the light depends on the type of phosphor material used. See *Figure 9-29*.

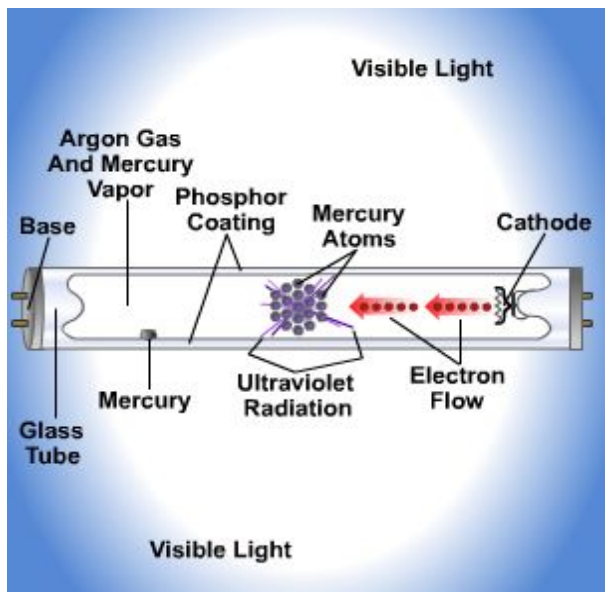

Figure 9-29 — Fluorescent lamps.

10.1.6 High Intensity Discharge Lamp Ballasts

All HID lamps have a negative resistance characteristic. As a result, without a current limiting device, the lamp current will increase until it destroys the lamp. Ballasts for HID lamps provide three basic functions: to control lamp current to the proper value, to provide sufficient voltage to start the lamp, and to match the lamp voltage to the line voltage. Ballasts are designed to provide proper electrical characteristics to the lamp over the range of primary voltage stated for each ballast design. Typical ballasts are shown in *Figure 9-30*.

Ballasts are classified into three major categories depending on the basic circuit involved: non-regulating, lead type regulating, and lag type regulating. Each type has different operating characteristics.

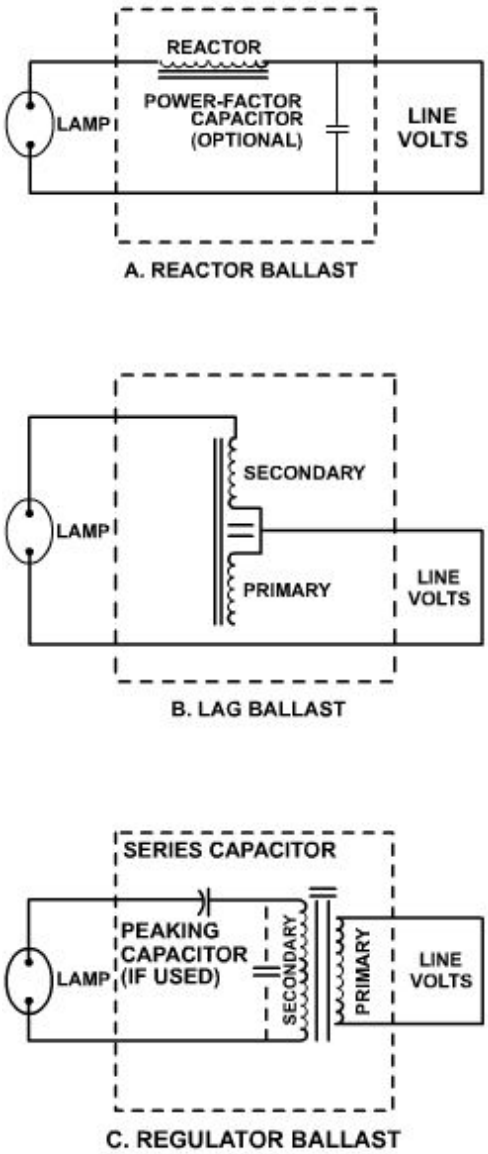

Figure 9-30 — Mercury lamp ballast circuits.

10.1.7 High Intensity Discharge System Troubleshooting

HID lighting systems include the power supply system (wiring, circuit breakers, and switches), lighting fixture (socket, reflector, refractor or lens, and housing), ballast, lamp, and frequently a photoelectric cell to turn on the fixture at dusk. When an HID system does not operate as expected, the source of the problem can be in any part of the total system.

It is important to understand normal lamp failure characteristics to determine whether or not operation is abnormal. All HID lamps have expected lamp failure patterns over life; these are published by lamp manufacturers. Rated life represents the expected failure point for one third to one half of the lamps, depending on the lamp type and the lamp manufacturer's rating.

The end of life characteristics for the different HID lamps is as follows:

- **Mercury**. Normal end of life is a non-start condition or low light output, resulting from blackening of the arc tube due to electrode deterioration during the life of the lamp.
- **Metal halide**. Normal end of life is a non-start condition, resulting from a change in the electrical characteristic when the ballast can no longer sustain the lamp. Lamp color at the end of life will usually be warmer (pinker) than that of a new lamp due to arc-tube blackening because of changes in thermal balance within the tube. Review the lamp manufacturers' recommendations regarding metal halide lamp enclosures.

- **High-pressure sodium**. Normal end of life is on/off cycling. This results when an aging lamp requires more voltage to stabilize and operate than the ballast is able to provide. When the normally rising voltage of the lamp exceeds the ballast output voltage, the lamp is extinguished. Then, after a cool down period of about 1 minute, the arc will restrike and the cycle is repeated. This cycle starts slowly at first and then increases in frequency if the lamp is not replaced. Ultimately, the lamp fails because of overheating of the arc-tube seal.

There are four basic visual variations in the lamp of a HID lighting system that indicates when a problem may exist:

- The lamp does not start.
- The lamp cycle is on and off or is unstable.
- The lamp is extra bright.
- The lamp is dim.

The following table indicates the most likely possible causes for each of these system conditions. Refer to *Table 9-2*.

Table 9-2 — Lamp failure causes.

HID System Conditions	Other than lamp	Lamp
Lamp does not start	Ballast failure Incorrect or loose wiring Low supply voltage Low ambient temperature Circuit breakers tripped Inoperative photocell Starting aid failure (HPS)	Lamp loose in socket Improper lamp wattage Normal end of life Lamp internal structure broken
Lamp cycle is on and off or is unstable	Low supply voltage Incorrect ballast High supply voltage (HPS) Ballast voltage low System voltage dipping Fixture concentrating energy on lamp (HPS)	Normal end of life (HPS) Lamp operating voltage too high (HPS) Lamp arc tube unstable
Lamp is extra bright	Shorted or partially shorted ballast or capacitor Over wattage operation	Improper lamp wattage High lamp voltage
Lamp is dim	Low supply voltage Incorrect ballast Low ballast voltage to lamp Dirt accumulation Ballast capacitor shorted Corroded connection in fixture	Improper lamp wattage Low lamp voltage Lamp difficult to start

10.2.0 Street and Area Classification

Street lighting requirements generally consist of a minimum average maintained foot candle level and a maximum allowable uniformity ratio for the installation. The authority for these requirements is the American National Standards Institute (ANSI)/Illuminating Engineering Society (IES) publication, *Standard Practice for Roadway Lighting*. Another

publication that may prove helpful is *Informational Guide for Roadway Lighting*, published by the American Association of State Highway and Transportation Officials. The only significant difference between the two publications is that the latter allows a 4 to 1 uniformity ratio instead of the 3 to 1 uniformity ratio specified by IES. These uniformity ratios are defined as the ratio of the average foot candle value divided by the minimum foot candle value.

10.3.0 Lighting Intensity

The illumination and uniformity requirements are given in *Table 9-3*. Note that the illumination level is dependent upon the roadway classification and the area classification defined in the following material.

Table 9-3 — Roadway Illumination and Lamp Selection Guide.

Area Class	Roadways Classification	Min. Avg Maint FC	Uniformity Avg/Min FC/FC
Residential	Local	0.4	6:1
	Collector	0.6	3:1
	Major	1.0	3:1
Intermediate	Local	0.6	3:1
	Collector	0.9	3:1
	Major	1.4	3:1
Commercial	Collector	1.2	3:1
	Major	2.0	3:1

Streets are classified into three major categories: major, collector, and local. Refer to *Figure 9-31*.

- **Major**: The part of the roadway system that serves as the principal network for through traffic flow. The routes connect areas of principal traffic generation and important rural highways entering the city.
- **Collector**: Distributor and collector roadways serving traffic between major and local roadways. These are roadways used mainly for traffic movements within residential,

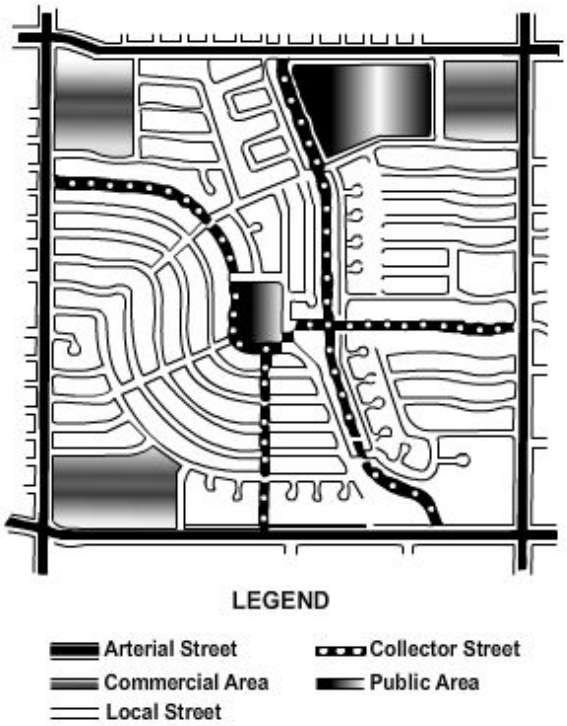

Figure 9-31 — Categories of roads.

commercial, and industrial areas

- **Local**: Roadways used primarily for direct access to residential, commercial, industrial, or other abutting property. They do not include roadways carrying through traffic.

The locality or area is also defined by three major categories: commercial, intermediate, and residential. Refer to *Figure 9-31*.

- **Commercial**: That portion of a municipality with business development where ordinarily there are large numbers of pedestrians and a heavy demand for parking space during periods of peak traffic or a sustained high pedestrian volume and a continuously heavy demand for off street parking during business hours.
- **Intermediate**: That portion of a municipality which is outside of a downtown area but generally within the zone of influence of a business or industrial development; characterized often by moderately heavy nighttime pedestrian traffic and somewhat lower parking turnover than is found in a commercial area. This definition includes military installations, hospitals, and neighborhood recreational centers.
- **Residential**: A residential development, or a mixture of residential and commercial establishments, characterized by few pedestrians and a lower parking demand or turnover at night. This definition includes areas with single-family homes and apartments.

10.4.0 Selection of Luminaries

Luminaries are designed to provide lighting to fit many conditions. For street and area lighting, five basic patterns are available, as shown in *Figure 9-31*. While many luminaries can be adjusted to produce more than one pattern, no luminaire is suitable for all patterns. Use care, especially in repair and replacement, to install the proper luminaire for the desired pattern, as specified in the manufacturer's literature. Even when the proper luminaire is installed, take to ensure that all adjustments have been properly made to produce the desired results.

- **Type I** (*Figure 9-32, View A*) is intended for narrow roadways with a width about equal to lamp-mounting height. The lamp should be near the center of the street. A variation of this positioning (*Figure 9-32, View B*) is suitable for intersections of two such roadways with the lamp at the approximate center.
- **Type II** (*Figure 9-32, View C*) produces more spread than does Type I. It is intended for roadways with a width of about 1.6 times the lamp-mounting height with the lamp located near one side. A variation (*Figure 9-32, View D*) is suitable for intersections of two such roadways with the lamp not near the center of the intersection.
- **Type III** (*Figure 9-32, View E*) is intended for luminaries located near the side of the roadway with a width of not over 2.7 times the mounting height.
- **Type IV** (*Figure 9-32, View F*) is intended for side of road mounting on a roadway with a width of up to 3.7 times the mounting height.
- **Type V** (*Figure 9-32, View G*) has circular distribution and is suitable for area lighting and wide roadway intersections. Types III and IV can be staggered on opposite sides of the roadway for better uniformity in lighting level or for use on wider roadways.

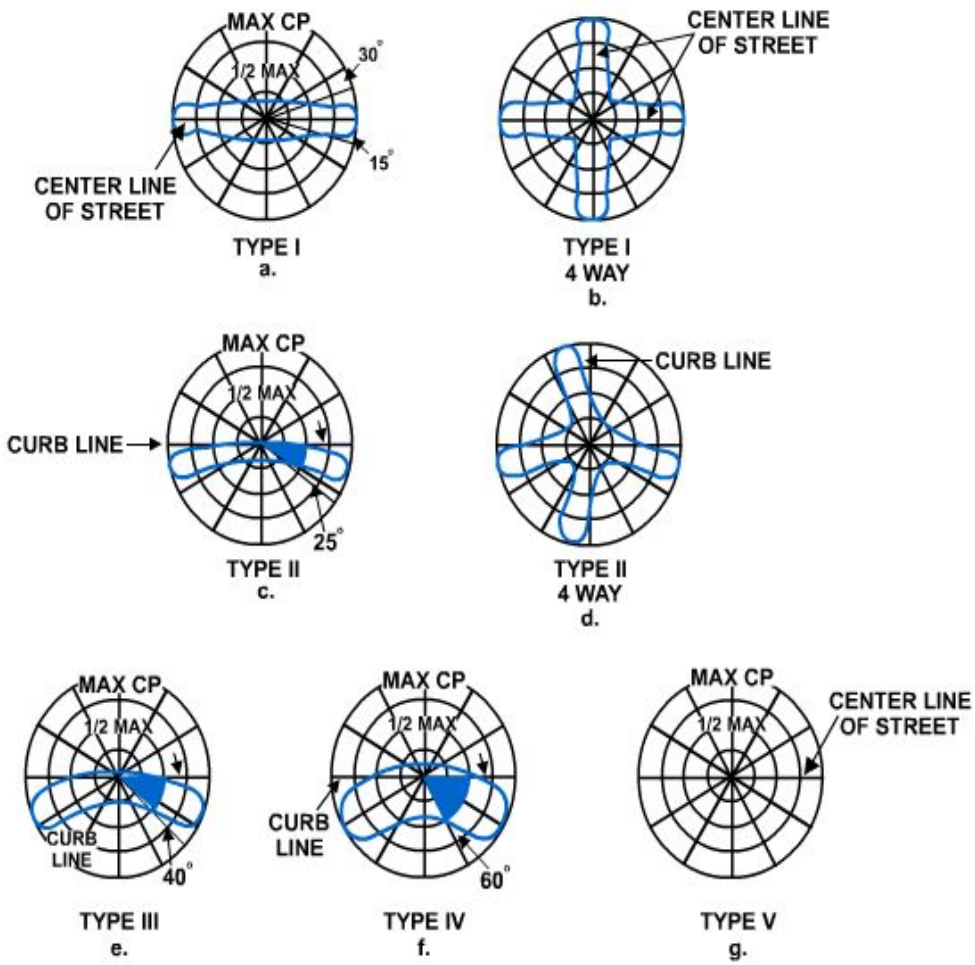

Figure 9-32 — Light distribution patterns for roadway lighting.

10.5.0 Mounting Height and Spacing

There are two standards for determining a preferred luminaire mounting height: the desirability of minimizing direct glare from the luminaire and the need for a reasonably uniform distribution of illumination on the street surface. The higher the luminaire is mounted, the farther it is above the normal line of vision and the fewer glares it creates. Greater mounting heights may often be preferable, but heights less than 20 feet cannot be considered good practice.

You must be somewhat familiar with the terminology relating to how fixtures are located down a roadway. *Figure 9-33* shows these relationships graphically. The following information will be useful when determining the most appropriate mounting arrangements.

- The “transverse direction” is back and forth across the width of the road, and the “longitudinal direction” is up and down the length of the road. Refer to *Figure 9-33*.
- Modern roadway fixtures are designed to be mounted in the vicinity of one of the curbs of the road. The “overhang” is the dimension between the curb behind the fixture and a point directly beneath the fixture.

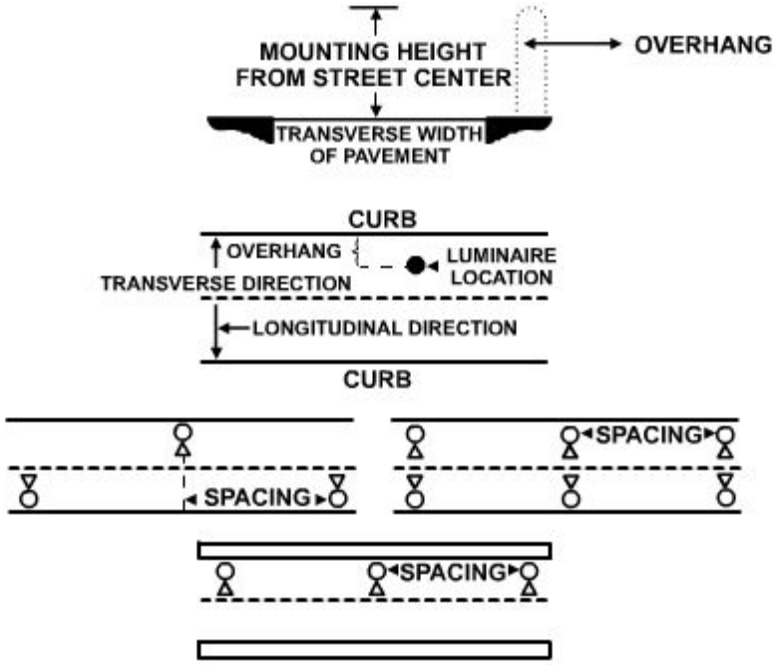

Figure 9-33 — Luminaire arrangement and spacing.

- A luminaire overhang should not exceed 25 percent of the mounting height.
- No attempt should be made to light a roadway that is more than twice the width of the fixture mounting height. A roadway luminaire produces a beam in both longitudinal directions and is limited in its ability to light across the street.
- There are three ways that a luminaire may be positioned longitudinally down the roadway (*Figure 9-33*). Note that the spacing is always the dimension from one fixture to the next down the street regardless of which side of the street the fixture is located on.
- A staggered arrangement generates better uniformity and possibly greater spacing than a one side arrangement. That is particularly true when the width of the road becomes significantly greater than the mounting height. When the width of the road starts approaching two mounting heights, an opposite arrangement definitely should be considered. That would, in effect, extend the two mounting-height width limitation out to four mounting heights.

The classification of a road and the corresponding illumination levels desired influence the spacing between luminaries. On a residential road, it may be permissible to extend the spacing so that the light beams barely meet (*Figure 9-34*). For traffic on business roadways where uniformity of illumination is more important, it may be desirable to narrow the spacing to provide 50-to100-percent overlap.

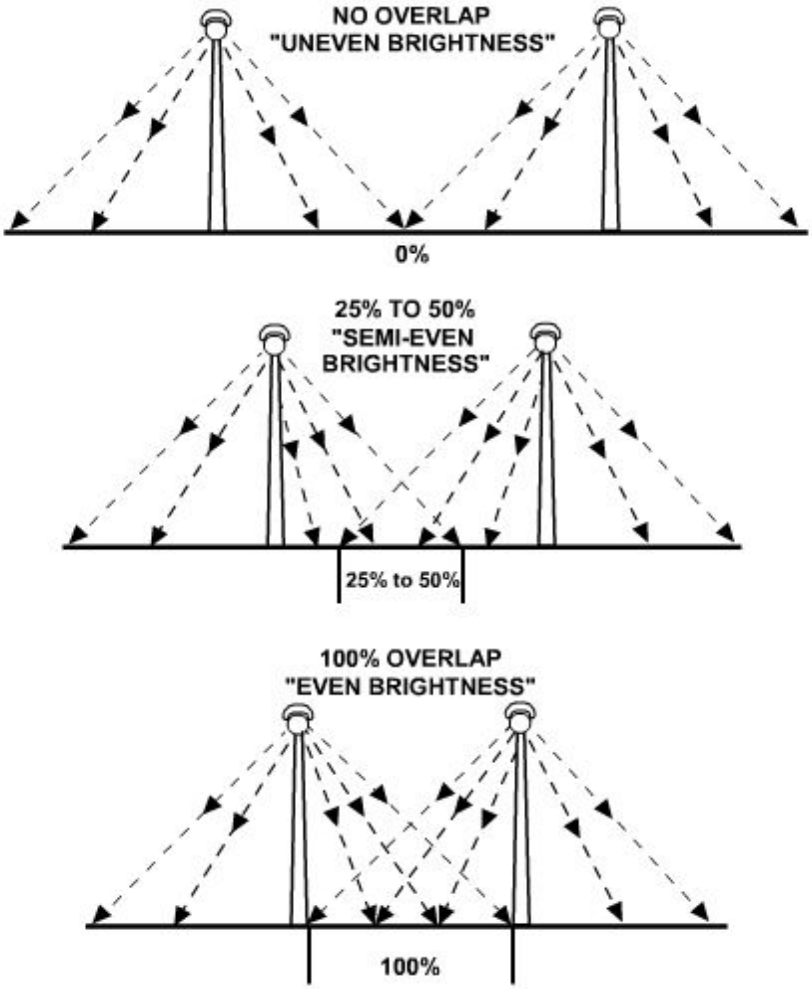

Figure 9-34 Pavement brightness.

10.6.0 Manufacturer's Literature

The performance specifications of each model, type, and size of luminaire are provided with the fixture or obtained from the manufacturer's ordering information. A working knowledge of this information will assist you in selecting and installing the correct luminaire to accomplish the job. Manufacturers provide technical literature for every luminaire they make. This literature includes utilization and isofoot candle curves. These curves are important in calculating the lighting intensity of a particular luminaire. *Figure 9-35* is a sample of manufacturer's literature for a 250- or 400-watt light fixture.

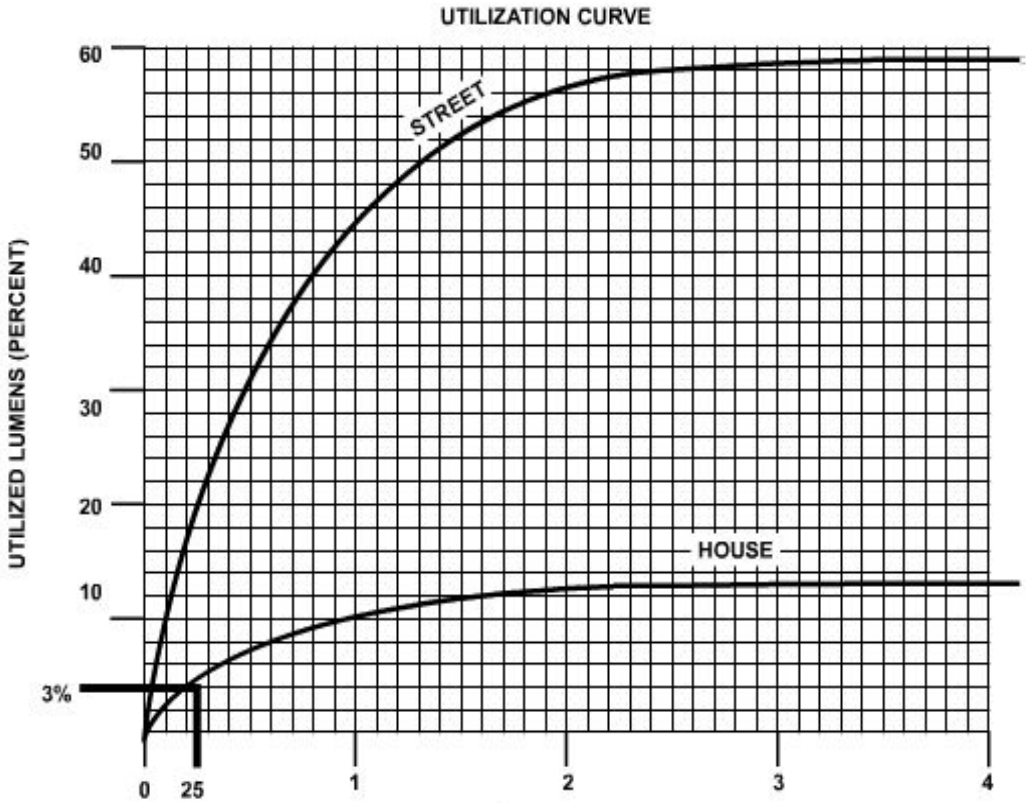

A

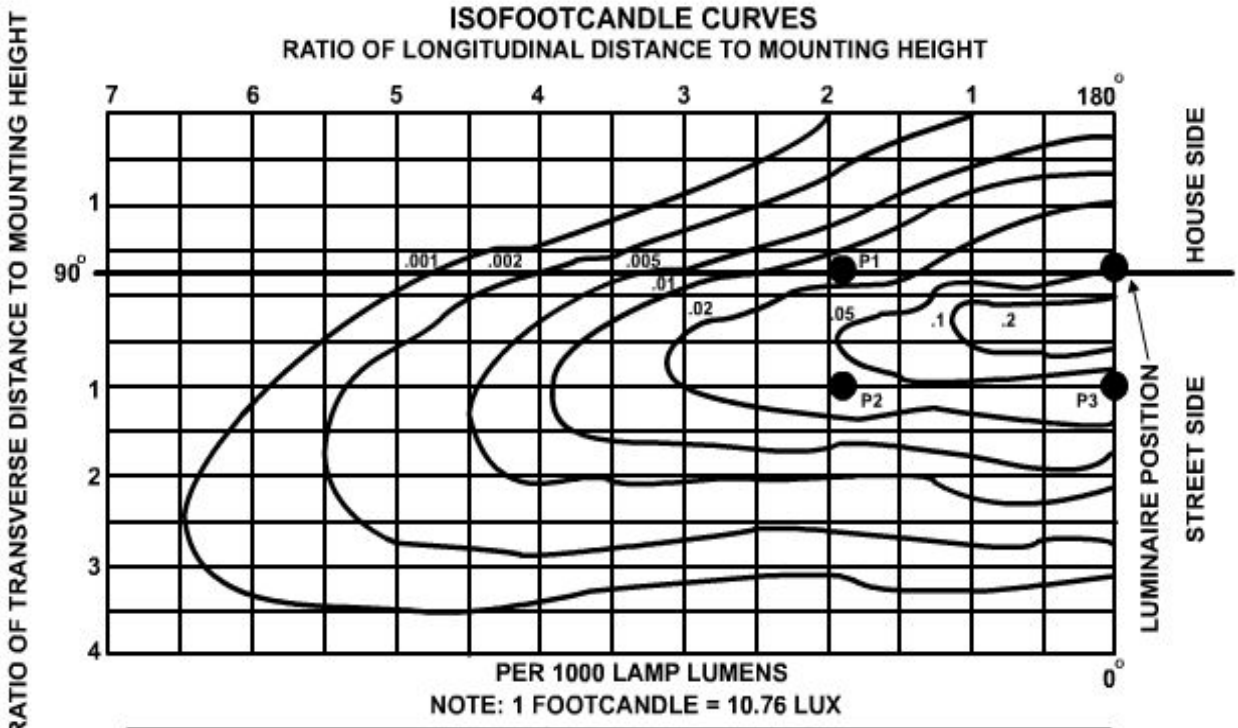

MOUNTING HEIGHT CORRECTION FACTORS

USE THE TABLE BELOW OR FACTOR = $\frac{900}{\text{(ACTUAL MH)}}$

MOUNTING HEIGHT FEET	20	25	30	35	40	45	50
FACTOR	2.25	1.44	1	.74	.56	.44	.36

B

Figure 9-35 — Streetlight manufacturer's literature.

10.6.1 Utilization Curve

The utilization curve (*Figure 9-38, View A*), a measure of luminaire efficiency, shows the amount of light that falls on the roadway and adjacent areas. Plot the amount of light that is usable or actually falls on the area to be lighted as a percentage of the total light generated in the luminaire for various ratios of transverse distance (across the street from the luminaire on both the house side and street side) to the mounting height (*Figure 9-36*). Obtain the coefficient of utilization for any specific situation from this curve. The utilization curve will determine the amount of light that actually strikes the roadway surface. This percentage of light has an impact on the spacing distance of the luminaries.

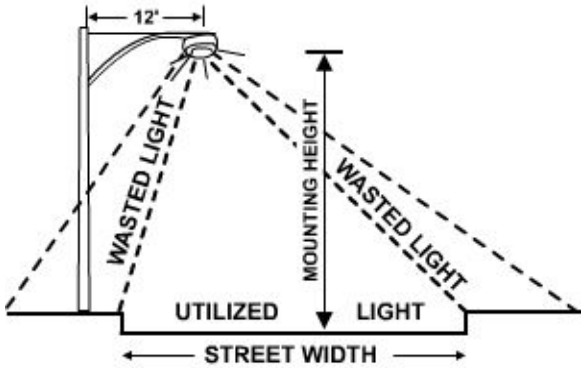

Figure 9-36 — Luminaire utilization.

10.6.2 Isofootcandle Curve

The isofootcandle diagram (*Figure 9-35, View B*) shows the isofootcandle data to the same scale as that used on a distribution of illumination on the road surface in the drawing containing a lighting layout. by vicinity of the luminaire.

The lines on this diagram connect all points having equal illumination, much as the contour lines on a topographical map include all points having the same elevation. Thus, at any point on the diagram (or roadway), we know the magnitude and direction of the illumination with respect to nearby points. To make this data more universal, the diagram gives you both the top horizontal and left vertical axes in terms of mounting height ratios.

It is sometimes convenient for you to replot the isofootcandle data to the same scale as that used on a drawing containing a lighting layout. By superimposing this diagram, you can study the distribution of light. Under the unity correction factor in the mounting height table (*Figure 9-35, View B*), you can find the mounting height for which the data are calculated. The numbers beside each line represent the initial footcandle values per 1,000 lamp lumens. Each footcandle value must be multiplied by 50 to obtain the correct footcandle value on the isofootcandle diagram. This ratio of actual lamp lumens divided by 1,000 is known as the lamp factor (LF). Note that the lamp factor allows a curve to represent the distribution from more than one lamp wattage; for example, from 250 and 400 watt lamps.

10.6.3 Maintenance Factor

Lighting efficiency is seriously impaired by blackened lamps, lamp life, and dirt on the reflecting surfaces of the luminaire. To compensate for the gradual loss of illumination, you must apply a maintenance factor (MF) to the lighting calculations.

Normally, each luminaire manufacturer can supply you with the maintenance factor for your lamp model; however, when the manufacturer's information is not available, a 0.70 maintenance factor is widely used in the industry.

10.7.0 Lighting Intensity Calculations

Achieving the most satisfactory solution for any given lighting problem requires sound judgment in making necessary compromises of all factors involved.

Selection of the luminaire can be influenced by budget constraints, present stock levels in the Federal Supply System, and availability. Once you have selected the luminaire, it is important to use the manufacturer's literature to determine the number of luminaries, mounting height, and spacing required to produce the desired illumination intensity.

Using the manufacturer's literature supplied in *Figure 9-35*, let us solve this sample problem:

Find:

- One sided spacing required to provide specified illumination
- Uniformity of illumination

Given: (*Figure 9-37*)

- Street width, 50 feet
- Mounting height, 40 feet
- Pole setback from curb, 2 feet
- Bracket length, 12 feet
- Required average maintained level of illumination, 2 footcandles
- 400 watt luminaire (50,000 lamp lumens)

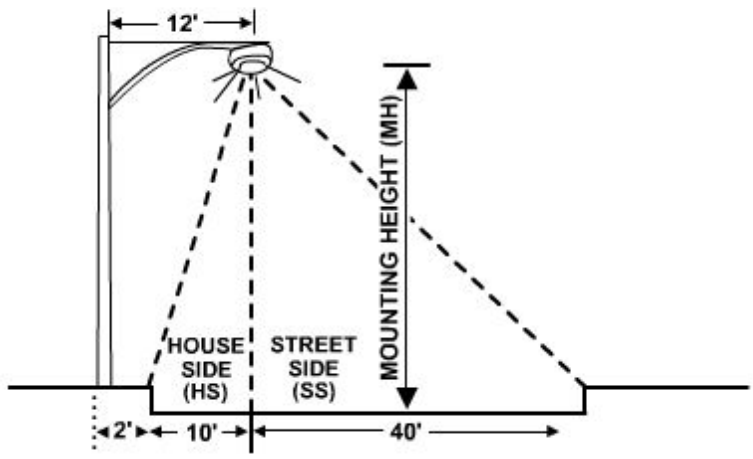

Figure 9-37 — Streetlight sample problem.

Solution:

Spacing. The equation to determine correct spacing is:

$$Spacing(S) = \frac{(LL)(MF)(CU)}{(fc)(W)}$$

Where:

LL = rated initial lamp lumens

MF = Maintenance factor

CU = coefficient of utilization

fc = illumination in footcandles

W = Street width, curb to curb

The values are given for LL (50.000), MF (assume 0.70). W (50). and fc (2). After determining a value for CU, you can solve the equation for average spacing.

To determine the coefficient of utilization, calculate the amount of wasted light on the street side (SS) and the house side (HS) where:

$$Ratio\ of\ HS = \frac{Transverse\ Dist}{Mounting\ Height} = \frac{10}{40} = 0.25$$

$$Ratio\ of\ SS = \frac{Transversel\ Dist}{Mounting\ Height} = \frac{50-10}{40} = \frac{40}{40} = 1.0$$

From the utilization curve in *Figure 9-37*, the ratio of 1.0 street side corresponds to 40 percent, and the ratio of 0.25 house side corresponds to 3 percent for a total of 43 percent CU.

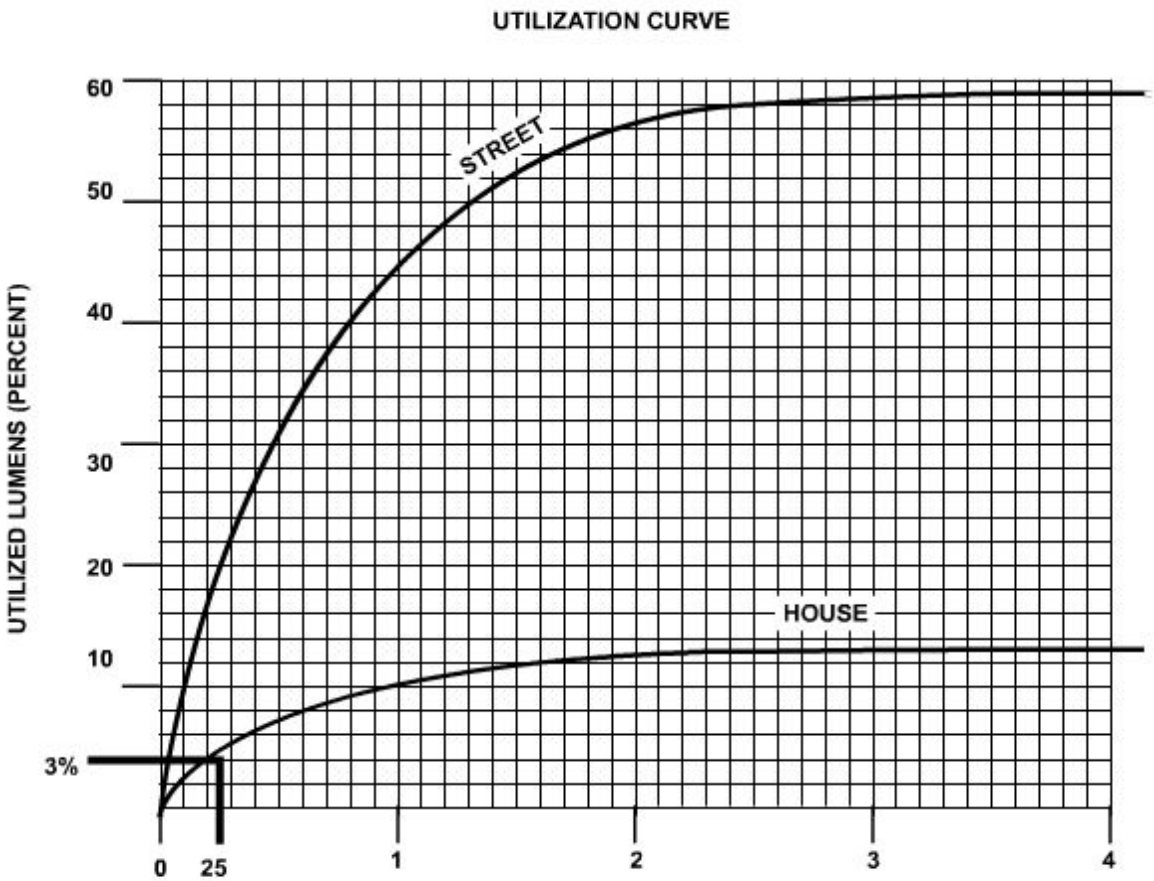

Figure 9-38 — Utilization curve.

Spacing can be determined as

$$S = \frac{(50{,}000)\ (0.70)\ (0.43)}{(2)\ (50)} = 150\ feet$$

Uniformity Solution:

The uniformity of illumination is expressed in terms of a ratio of

$$\frac{Average\ fc}{Minimum\ fc}$$

We have determined that one-side spacing of 150 feet will produce an average of 2 footcandles on the roadway surface. We can now determine the point of minimum illumination from the isofootcandle diagram.

You can find the minimum value of the illumination by studying the isofootcandle diagram and taking into account all luminaries that are contributing significant amounts of light. Generally, the minimum value will be found along a line halfway between two consecutively spaced luminaries. The minimum value can be determined by checking the minimum footcandle values at points P1, P2, and P3, as shown in *Figure 9-39*.

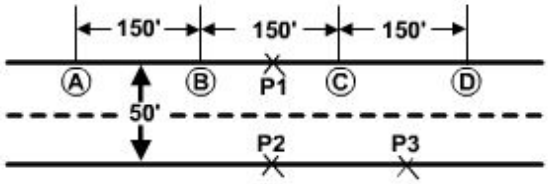

Figure 9-39 — Streetlight layout.

Plot the roadway surface on the isofootcandle curve by observing the 40-foot mounting height to longitudinal and transverse distance ratios. (See *Figure 9-40*.) Since PI is located outside the 0.02 footcandle line, it is the lowest total footcandle value. This value would be 0.03 fc (0.015 footcandle from each luminaire).

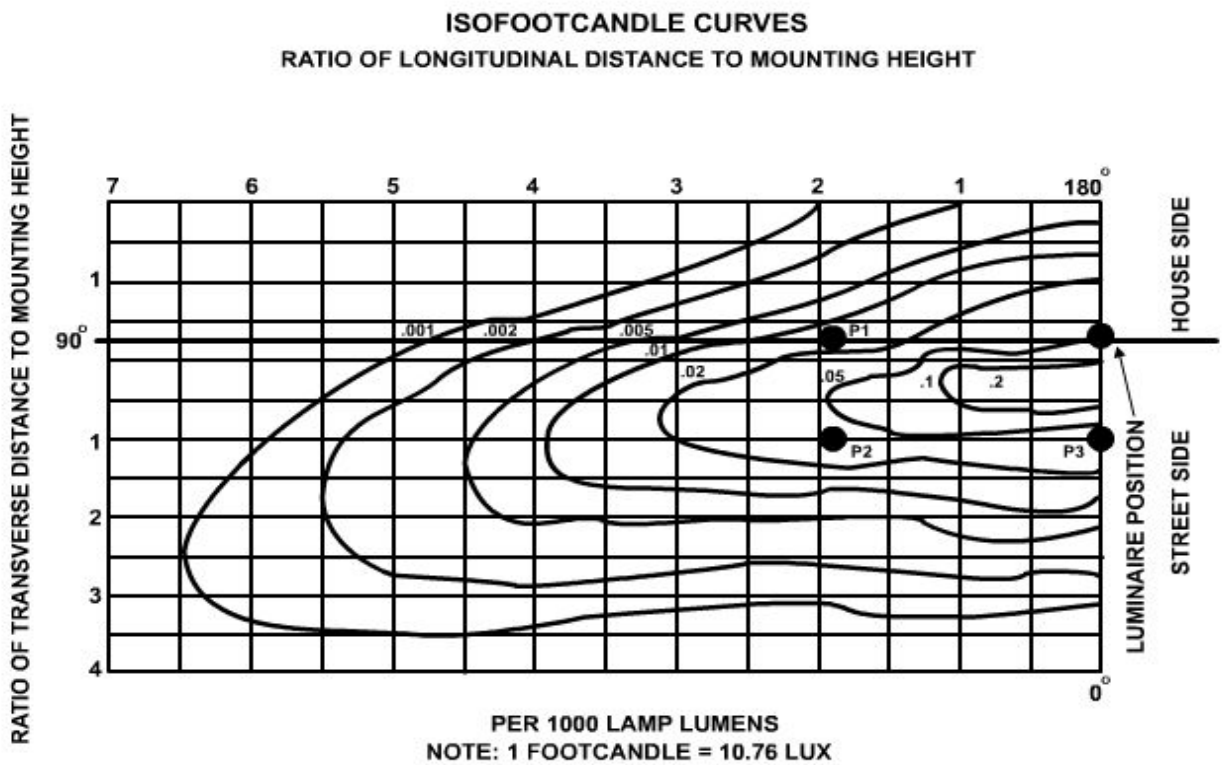

Figure 9-40 — Isofootcandle curve.

Figure 9-41 shows a perspective view of the two isofootcandle lines that are considered when determining the illumination value at P1.

Now apply the following factors to this “raw” footcandle value, as shown in the formula:

$$fc = (fc)\,(LF)\,(MF)\,(CF)$$

Where:

$fc\ \min =$ minimum point footcandles

$fc =$ raw footcandle from isofootcandle diagram

LF = lamp factor

MF = maintenance factor

CF = mounting height correction factor

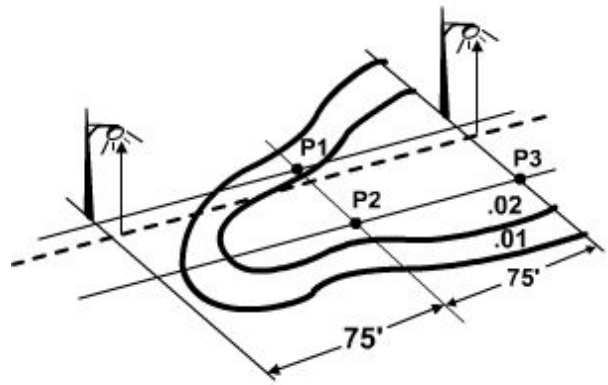

Figure 9-41 — Roadway perspective view.

The values are given for fc (0.03) and MF (assume 0.70). The value for LF was determined earlier as 50 for the 400 watt lamp. Determine the CF factor from the correction chart below the isofootcandle curve in figure 9-34. The CF for a 40 foot mounting height is 0.56.

The minimum point footcandles are

$$fc\ \min = (0.03)\,(0.70)\,(0.56) = 0.58$$

Therefore, the average-to-minimum ratio of uniformity would be

$$\frac{2\ fc}{0.58\ fc} = 3.40$$

A uniformity ratio of 3.40 meets the ANSI/IES recommended roadway illumination levels (*Table 9-3*) for a major, commercial roadway.

11.0.0 FIXTURES

There are fixture configurations to meet almost any lighting requirement or design. While the basic purpose of the fixture is to hold and prevent damage to the lamps and lamp sockets, the fixture also helps direct the light beams into the lighting patterns desired. The fixture, with its reflector and lens, determines the quality of the light being produced. Reflectors can either concentrate or diffuse light rays, and the lens can pass or refract light rays. Quite often, the lens is used to do both from one light source, that is, part of the light rays are refracted to produce a soft, even spread of light in the outer part, while the light rays are concentrated in other areas of the lens to produce a bright, hard light at a specific area. Some streetlight fixtures are examples of this. The sides of the lenses produce a general diffused lighting to prevent blinding automobile operators and, at the same time, they produce a bright light pattern below the lamp along the curb.

Flood or security lighting fixtures may be either open or enclosed. The open fixtures provide higher maintained efficiency and more accurate beam control. The open fixture will, under some conditions, require a “hard glass” bulb to prevent bulb breakage.

Most fixtures will have provisions for mounting ballasts (transformers) within the fixture and will provide protection for the ballast. In some cases, particularly in light pole lighting, the ballasts may be mounted in the pole base and not mounted in the fixture. Several methods of fixture attachment are possible and should be considered when you

order fixtures for a particular job. The location and job determine whether the fixture is suspended, bracket-mounted, or arm mounted. Most brackets can be attached either to wood or metal support structures. In either case, the fixture should be firmly attached to the structure to allow precise aiming for light distribution.

11.1.0 Light Fixtures

As we stated earlier, a number of light systems are in use today, such as streetlights, floodlights, and security lights. These systems are either series or multiple (parallel), depending on how they are used and the equipment available.

11.1.1 Series and Multiple Circuits

The series circuit is supplied by a regulating transformer that gives a constant current, usually of 6.6 amperes, to the lighting circuit. If higher amperage is required, autotransformers are available for stepping up the current to 15 or 20 amperes. This higher amperage permits the use of more rugged lamp filaments that give longer life for lamps of equal candlepower and give higher lamp efficiency.

The multiple (parallel) circuits consists of a number of streetlights supplied by a distribution transformer, delivering a constant low voltage to a circuit or secondary main that also supplies other loads; however, running secondary conductors any great distance to supply a parallel connected lamp or a group of lamps is impractical because of the excessive voltage drop.

The cost of the multiple luminaire is low compared to the series type because the low voltage allows for the elimination of other luminaire accessories. This saving is largely offset, however, by the increased requirement for control devices and the copper wire cost. Lamp life and efficiency are comparatively low, and the illumination is not as uniform as in a series circuit.

Here are a few suggestions that may aid you in choosing a system.

- If the total wattage of the circuit exceeds 2 kilowatts or more than 15 lights, consider a series lighting system.
- When extending an existing system, use the existing circuit.
- If low voltage capacity exists at the proposed location, use a

  multiple system, even though the load exceeds 2 kilowatts.
- When several small lights are to be spaced rather far apart and no low voltage secondary exists along the route, use the series system regardless of the load size or number of lights.
- When estimates show that one type of system will save money and time, use the more economical system.

11.1.1.1 Series Circuits

Let us consider a series streetlight system. The power for the circuit will be supplied from the base primary distribution lines, through fuse cutouts, to an oil switch, and from the oil switch to a constant current regulator (*Figure 9-42*). The constant current regulator will supply power to the series loops, thus to the individual lamps. While the current (normally 6.6 amperes) remains constant, the voltage of the circuit is equal to the sum of the voltages of all the lamps plus the voltage drop in the wire. With enough lamps connected in series, the circuit can become a high voltage circuit.

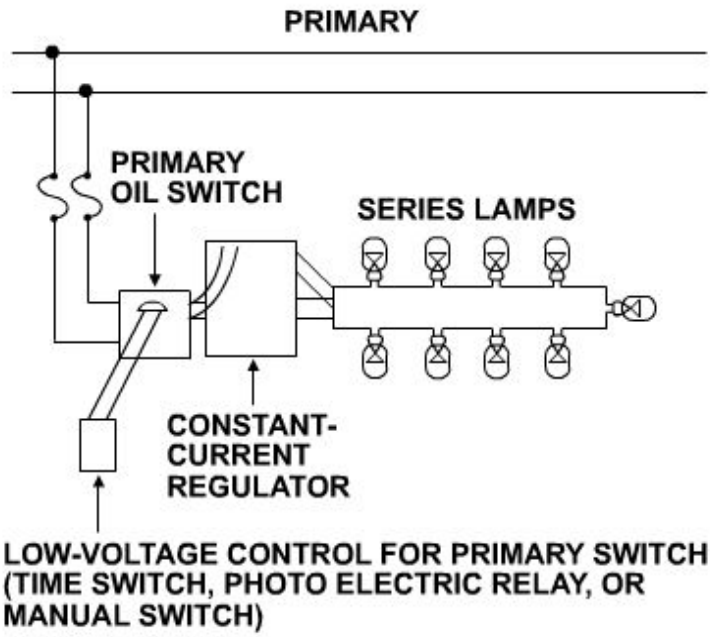

Figure 9-42 — Series street lighting circuit.

The series circuit is easy to control, but any break, such as a burned out filament in a lamp, interrupts the entire circuit. The use of film-disk cutouts (*Figure 9-43*) in the lamp socket prevents lamp failure from interrupting the circuit. The cutouts consist of two metal disks separated by a thin film of insulating material. The insulating film is held in place by the spring pressure of the contact disks. When the filament of the lamp burns out, the entire circuit voltage appears across the film disk. This is more than sufficient to puncture the film and close the circuit between the two metallic disks, bypassing the burned out filament. In later series circuits, an isolation transformer is used to eliminate the need for the film disk fixture. The primary winding of the isolation transformer is connected in series with the power source and the secondary winding provides power to the light bulb. Since the primary winding is isolated from the secondary winding, a burned out bulb will not interrupt the continuity of the lighting circuit.

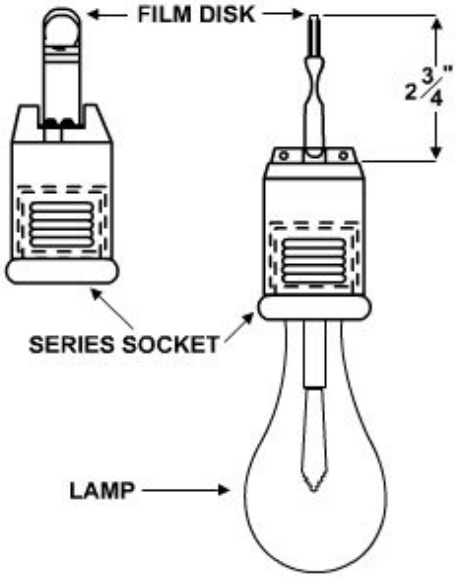

Figure 9-43 — Series lamp, socket, and film disk cutout.

A series circuit is installed using only one wire, as shown in *Figure 9-44, View A*. Some of the lamps are connected in the outgoing wire, and the rest are connected in the return wire. This is called an "open loop" series circuit. An open-loop circuit is less expensive initially, but troubleshooting is difficult, time consuming, and costly.

To make it possible to locate a fault like an open circuit or a ground bring the outgoing and return conductors close together in numerous places so that the circuit can be easily short-circuited. Such a circuit is called a “closed-loop” circuit, as shown in *Figure 9-44, View B*. Sometimes the circuit is arranged to combine the open- and closed-circuit features, as shown in *Figure 9-44, View C*. Use of the closed loop or combination circuit makes troubleshooting easier.

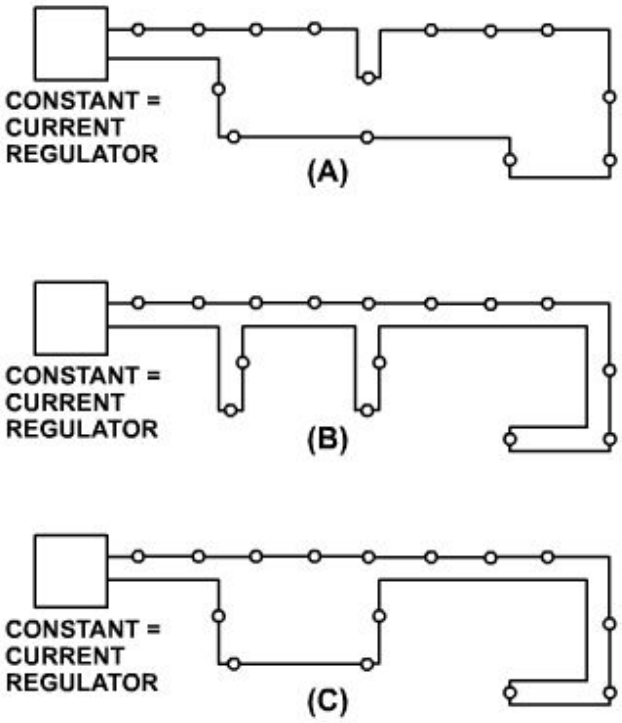

Figure 9-44 — Diagrams of (A) open loop, (B) closed loop, and (C) combined open and closed loop series circuits.

Installing the series circuit on the same crossarm as the primary distribution conductor is usually the most economical. When using two primary crossarms, carry the streetlight wires on the lower arm in the end pin position. When two separate single conductor street circuits are on the same crossarm, do not place them in adjacent pin positions; this could cause confusion in troubleshooting.

Insulator sizes should be based on the open circuit voltage of the largest regulator used and are usually the same size as those used for primary distribution. Use white insulators on a series street circuit to distinguish them from the primary distribution insulators and to assist in identifying the circuits for operating and maintenance work. Use small strain insulators for cutting in individual lamps or loops of five lamps or fewer. You may also use equivalent voltage insulators with automatic line splices. If the loop consists of more than five lamps, use a primary disk insulator. The insulator is usually cut in after the conductors have been strung.

The conductor size should be No. 6 medium hard drawn copper or its mechanical equivalent. Although No. 8 hard drawn copper is usually too weak for longer spans, the use of copper weld or similar conductors of high-mechanical strength overcomes the difficulty. Conductor sag should be the same as for primary distribution.

Protect constant current regulators on overhead circuits with lightning arresters on both the primary and secondary sides.

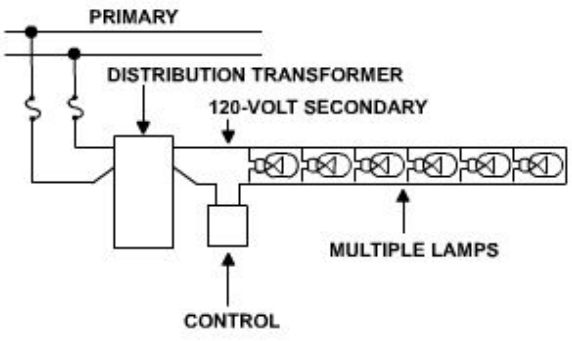

Figure 9-45 — Multiple street lighting circuit.

11.1.1.2 Multiple Circuits

The multiple streetlight system uses a distribution transformer of the proper size as service equipment. (*See Figure 9-45*). Notice that the transformer is fed directly through fuse cutouts from the base primary distribution system. The control for the circuit is connected into one line of the secondary side. The selection of output voltage of the transformer depends on the voltage required for the individual lamps that are installed. Depending on the types of lamps selected, this voltage may be from 120 volts to 480 volts. You must know the type of lamp you will use in the circuit before you can properly select the transformer to feed the streetlight system.

11.1.2 Components and Controls

Many components are required to construct an area lighting system. These include constant current transformers, relays, controls, fixtures, wiring, and lamps. Controls can be manual, automatic, or a combination.

11.1.2.1 Constant Current Transformer

The constant current transformer, usually called a regulator, has a movable secondary winding that automatically changes position to provide constant current for any load within its full load rating. The balance point between coil weight and magnetic force may be adjusted to provide the desired output current.

A moving-coil regulator is recommended because of the close regulation required for street lighting work. It consists of a fixed primary coil and a movable secondary coil on a laminated core. Voltage applied to the primary winding induces voltage in the secondary winding. When the secondary circuit is closed, the magnetic field in the secondary reacts with the primary coil field to push the movable coil up. The balance point between coil weight and magnetic force is designed to provide the desired secondary current (usually 6.6 amperes).

On most existing installations, the constant current regulator is of the outdoor type. Three main types of installation are used for these regulators: two pole platform, timber or steel construction single pole platform, and pole mounted. Any regulator larger than 20 kilovolt amperes (kva) should be mounted on a platform.

Constant current regulators should be loaded as near 100 percent as possible since both efficiency and power factor are best at this load. Specifications of the American Institute of Electrical Engineers (AIEE) require constant current transformers to deliver the rated secondary current at l0 percent overload. Do not install a larger size regulator before regulator reaches this 10 percent

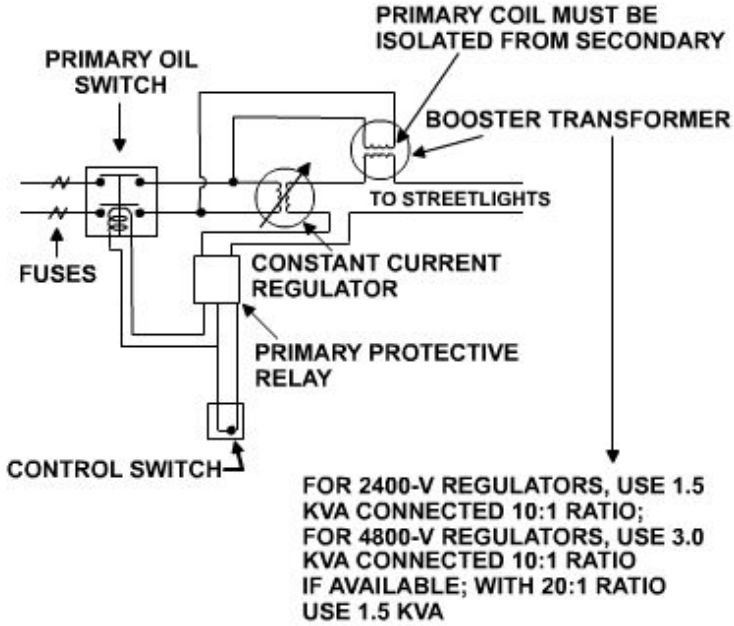

Figure 9-46 — Method of relieving slightly overloaded regulators with a distribution or booster transformer.

overload. When larger regulators must be installed and are not readily available, use a booster transformer with its secondaries connected into the series street circuit and its primaries connected to the primary feeder supplying the regulator (*Figure 9-46*).

Since transformers used for this purpose should have secondary bushings insulated for the high voltage of the series street circuit, a special booster transformer is better than an ordinary distribution transformer for use with constant-current regulators of 10 kilowatts and larger. When using a booster transformer, isolate the primary coil from the secondary coil; that necessitates removing any internal lead connecting the two coils. The additional load handled by this device equals the product of the street circuit current and the secondary voltage of the transformer. Thus, if a 2,400/240 volt transformer is used, the additional load that the street circuit can carry is 240 volts times 6.6 amperes or 1.584 kilowatts (Kw).

Many advances in lighting and communications have occurred in the past few years. With the cost of energy rising daily and the demand for accurate and reliable communications, any system that provides a higher level of efficiency must be considered. In this chapter we will discuss public address systems, interoffice communications, and the fundamentals of fiber-optic communication cables and components. This chapter also will cover area street lighting, floodlighting, and security lighting.

12.0.0 FLOODLIGHTS

Streetlighting systems usually give lighting intensity from .01 to 0.5 footcandle; however, this value is too low for any night activity requiring good visibility. *Table 9-4* gives recommended illumination intensities for specific night activities.

Table 9-5 — Night Activity Lighting Intensity Chart

GENERAL APPLICATION	MINIMUM AVERAGE RECOMMENDED FOOTCANDLES		
BUILDING EXTERIORS	**CITY**	**SUBURBAN**	**RURAL**
Terra cotta, light marble or plaster	15	10	5
Bedford or buff limestone, smooth buff face brick, concrete, aluminum	20	15	10
Smooth or medium gray brick, common tan or dark field gray brick	30	20	15
Brownstone, stained wooden shingles or other dark surfaces	50	35	20
CONSTRUCTION			
General		10	
Excavation		2	
INDUSTRIAL ROADWAYS			
Adjacent to buildings		10	
Not bordered by buildings		5	
INDUSTRIAL YARD/MATERIAL HANDLING AREA		5	
LOADING/UNLOADING PLATFORMS, FRIEGHT DOCKS		20	
PARKING AREAS			
Industrial		10	
Shopping centers		2 - 5	
Commercial lots		2 - 5	
SHIPYARDS			
General		5	
Ways		10	
Fabrication areas		30	
Outdoor recreational and sporting facilities should be based on Illuminating Engineering Society publications.			
All values are considered to be footcandles and are in terms of horizontal plane. Higher levels of illumination may be required for safety.			

The following suggestions will improve the efficiency of floodlighting systems:

- Select floodlight locations so beams strike the surface to be illuminated as nearly perpendicular as possible.
- When lighting irregular surfaces, use two or more floodlights to reduce sharp shadows caused by surface contour.

- For lighting extended horizontal surfaces, such as work areas, mount floodlights high enough to minimize glare.
- For lighting extended vertical surfaces, such as smoke stacks or towers, mount floodlights so the distance between floodlights or groups does not exceed twice the distance from the floodlight to the illuminated surface.
- Use a smaller number of large floodlights instead of a larger number of smaller floodlights.

12.1.0 Selection of Luminaries

The National Electrical Manufacturer's Association (NEMA) has classified floodlighting luminaries into four classes according to construction:

- Class HD (Heavy Duty) – Enclosed with an outer housing into which is placed a separate and removable reflector, or an enclosure in which a separate housing is placed over the reflector.
- Class GP (General Purpose) – Enclosed with a one piece housing with the inner surface serving as a reflector and the outer surface exposed to the elements.
- Class O (Open) – One piece housing without cover glass.
- Class OI – Same as Class O except with an auxiliary inner reflector to modify the beam.

The suffix letter "B" should be added to the above class designations to indicate when an integral ballast is required.

Example: A heavy duty floodlight with an integral ballast would be designated as a Class HDB floodlight.

The beam spread can be described in degrees or by NEMA types (*Table 9-6*). The beam spread is based on the angle to either side of the aiming point where the candlepower drops to 10 percent of its maximum value. The lamp and floodlight NEMA type is given in the upper left-hand corner of each isofootcandle diagram.

Use the NEMA type only as a reference. It does not describe the shape of the light pattern the floodlight produces or the peak illumination level (footcandles). Symmetrical floodlights have the same horizontal and vertical beam spread and are classified with one NEMA number. Asymmetrical beam spreads have a horizontal (H) and a vertical (V) designation. The horizontal value is always given first.

Example: *NEMA TYPE* $\frac{H}{7} X \frac{V}{6}$

Table 9-6 — Beam spread degree requirements.

			Min. Beam Efficiency %	
Beam Spread Degrees	**NEMA Type Designation**	**Beam Description**	**Incandescent, Tungsten, Halogen**	**High Intensity Discharge**
10 up to 18	1	Very narrow	38	
18 up to 29	2	Narrow	30	30
29 up to 46	3	Medium narrow	46	34
46 up to 70	4	Medium	50	38
70 up to 100	5	Medium wide	54	42
100 up to 130	6	Wide	56	46
130 and up	7	Very wide	60	50

12.2.0 Mounting Height and Spacing

The size of the area to be illuminated has a direct effect on determining the number and spacing of the poles. The suggested area that can be covered by a single pole is four times the mounting height. That is known as the “2X-4X” rule (*Figure 9-47*).

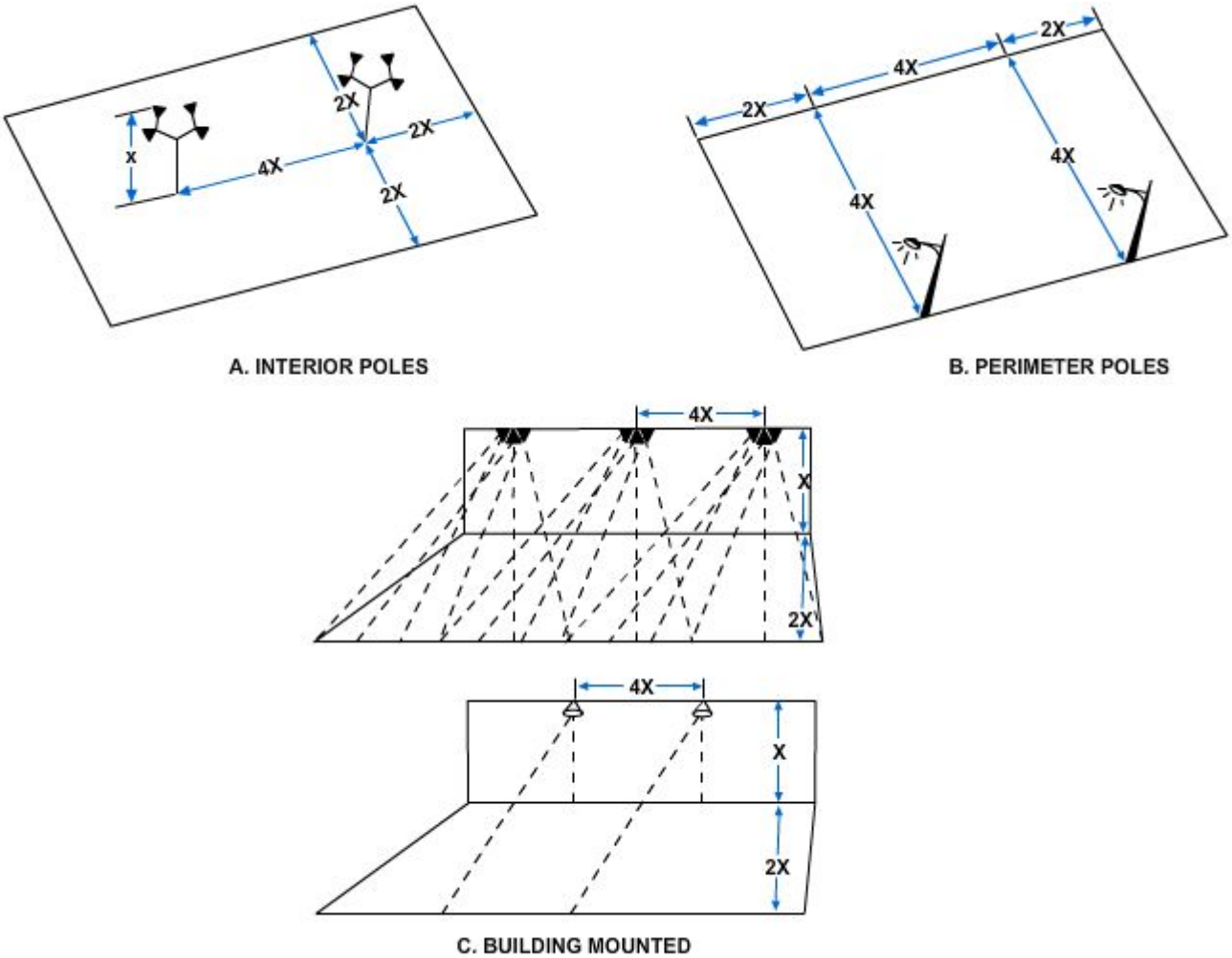

Figure 9-47 — 2X – 4X mounting height rule.

Areas lighted from interior poles or other central locations (*Figure 9-47, View A*) can be more economical, but perimeter locations are also desirable to provide needed visibility at entrances and exits. In the case of perimeter poles (*Figure 9-47, View B*), if you do not use comer locations, the distance from any side location to the edge of the area should not exceed twice the mounting height. If building-mounted luminaire locations are limited to only one side of the area to be lighted (*Figure 9-47, View C*), the system will be effective for a distance of only two mounting heights unless glare is not a determining factor.

According to the 2X-4X rule, the spacing is determined to be, from the corner to the first pole, two times the mounting height(X). Set the next pole four times this mounting height (X), and the CE will continue in this manner until reaching the last pole, which also is to be set two times the mounting height from the far corner. Use this rule to calculate the minimum number of poles. For long, narrow areas, it is better to choose several short poles than one tall one, especially since pole costs increase substantially above 40 feet. It is wise to consider several alternatives, however. to determine the system with the lowest cost.

If the pole is located inside the area to be lighted, there should be at least three floodlights or two streetlights per pole. For one side perimeter mounting, there should be two floodlights or one streetlight per pole.

12.3.0 Floodlight Aiming

When a fixture is aimed at the surface at an angle other than perpendicular, the maximum lighting level will always occur behind the aiming point, or point of maximum candela. That is important to know when the fixtures are placed close to the base of a tall structure. In that case, the highest lighting level will occur at the base, even though the fixture is aimed at the top.

For vertical aiming, the aiming point should be two thirds to three fourths of the distance across the area or twice the mounting height, whichever is the lowest value. Higher aiming angles will not improve utilization and uniformity. (See *Figure 9-48*)

The highest light level (vertical and horizontal) a floodlight can produce at a distance from the pole occurs when the maximum intensity or candlepower is aimed to form approximately a three, four, five triangle. (See *Figure 9-49*) That is useful when determining pole height for area lighting or setback for building floodlighting.

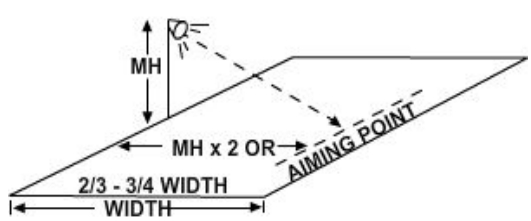

Figure 9-48 — Vertical aiming.

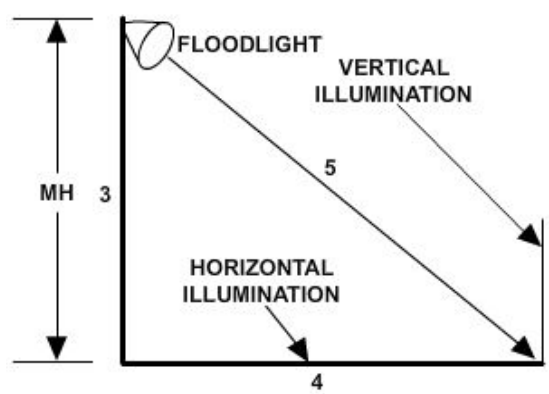

Figure 9-49 — Maximum candlepower of illumination.

Floodlights with NEMA 6 or 7 horizontal beams will effectively light an area 45 degrees to either side of the aiming line. In *Figure 9-50*, the perimeter pole needs at least two floodlights to cover the area in all directions. Narrower beam floodlights require less separation to achieve uniform lighting.

NEMA TYPE	HORIZONTAL BEAM SPREAD	SUGGESTED MAX. AIMING LINE SEPARATION
2	18°- 19°	12
3	29°- 46°	24
4	46°- 70°	40
5	70°- 100°	60
6	100°- 130°	90
7	130°	120

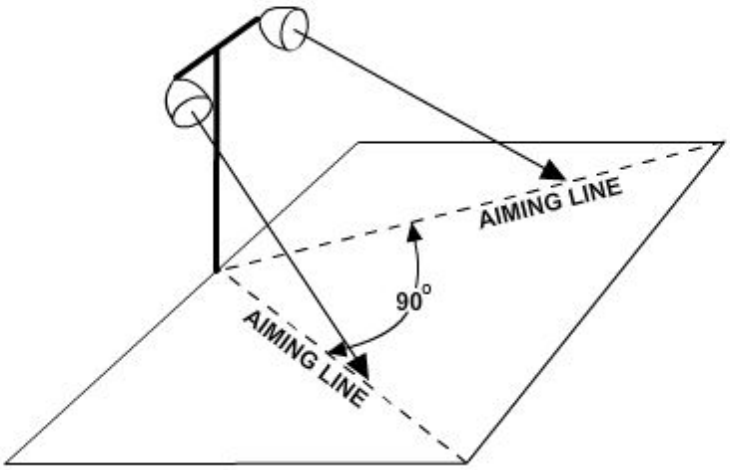

Figure 9-50 — Horizontal aiming.

Select lighting fixtures with a beam spread greater than the area being lighted. When several units are required, good lighting overlap occurs when the edge of the beam of one fixture coincides with the aiming point of the adjacent fixture.

By examining the shape (beam spread) of the lighting pattern emitted by the fixture, you can begin the process of selecting the NEMA type of floodlight best suited for the application.

Horizontal and vertical lumen distribution is stated on each photometric test. Generally, the more concentrated the luminous intensity (candela), the tighter the beam spread; for instance, the NEMA Type 2 Power Spot® floodlight has a beam spread of 22- degrees horizontal by 21-degrees vertical; whereas, a NEMA Type 5 has a beam spread of 77-degrees horizontal by 77-degrees vertical. The isofootcandle diagrams shown in *Figure 9-51* compare 1,000-watt metal halide Power Spot® luminaries of NEMA Type 2 and Type 5 when each luminaire is aimed out a distance of twice its mounting height.

INITIAL FC TABLE			
	MOUNTING HEIGHT		
	40	50	60
A	0.16	0.1	0.07
B	0.31	0.2	0.14
C	0.78	0.5	0.35
D	1.6	1.0	0.69
E	3.1	2.0	1.4
F	7.8	5.0	3.5
G	15.6	10.0	6.9
H	31.2	20.0	13.9

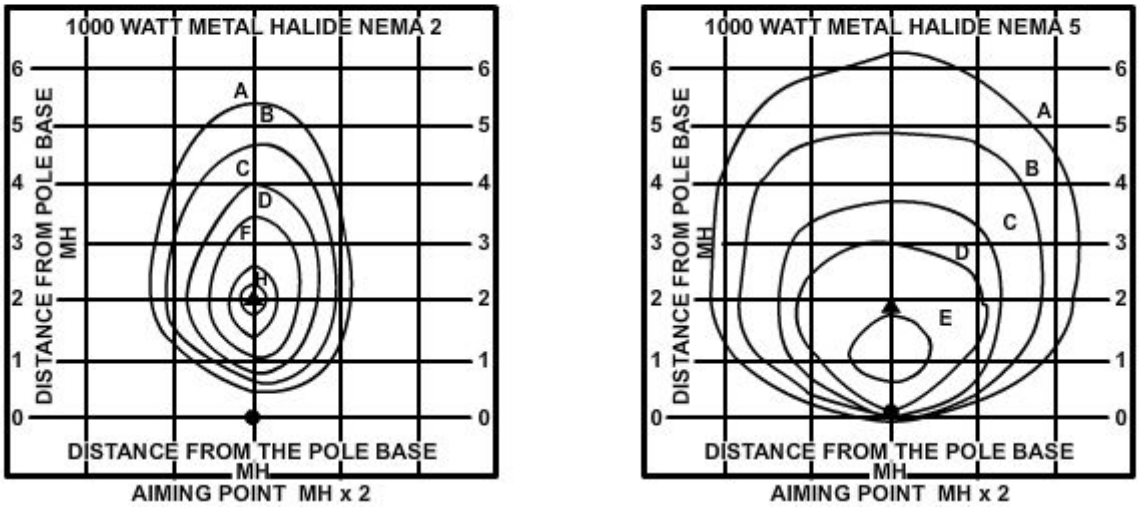

Figure 9-51 — Isofootcandle diagrams.

The initial footcandle level at the aiming point of different NEMA types varies a great deal; for example, assume that each luminaire is mounted at a 50-foot mounting height and aimed 100 feet (2 x MH) directly in front of its location. If you are using a NEMA Type 2 distribution, the approximate initial footcandle level at that point would be 20; however, if you are using a NEMA Type 5 distribution, the initial footcandle level would be approximately 1.5.

By understanding the intensity of the lighting pattern, you can appreciate the need for a range of distribution patterns.

12.4.0 Manufacturer's Literature

The performance specifications of each model, type, and size of luminaire are provided with the fixture or obtained from the manufacturer's ordering catalog. A working knowledge of this information will assist you in selecting and installing the correct floodlight to accomplish the job. *Figure 9-52* shows a sample of manufacturer's literature for a 250- to 1,000- watt light fixture.

INITIAL PC TABLE LU 200 watt			
	30	40	50
A	0.05	0.33	0.02
B	0.11	0.06	0.04
C	0.31	0.17	0.11
D	0.61	0.34	0.22
E	1.2	0.56	0.44
F	3.1	1.7	1.1
G	6.1	3.4	2.2
H	9.2	5.2	3.3

INITIAL PC TABLE LU 400 watt			
	30	40	50
A	0.10	0.06	0.04
B	0.22	0.13	0.08
C	0.58	0.31	0.2
D	1.1	0.63	0.4
E	2.2	1.3	0.0
F	5.6	3.1	2.0
G	11.1	6.4	4.0
H	16.7	9.4	6.0

INITIAL PC TABLE LU 1000 watt			
	40	50	60
A	0.16	0.1	0.03
B	0.31	0.2	0.04
C	0.38	0.5	0.35
D	1.5	1.0	0.89
E	3.1	2.0	1.4
F	7.8	5.0	3.5
G	15.5	10.0	8.9
H	23.4	15.0	10.4

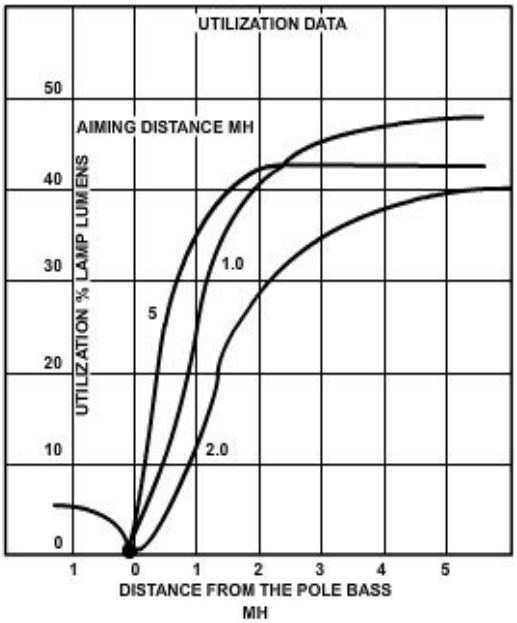

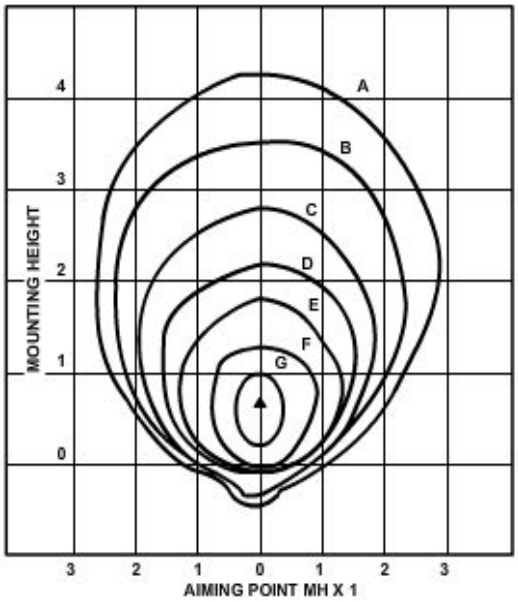

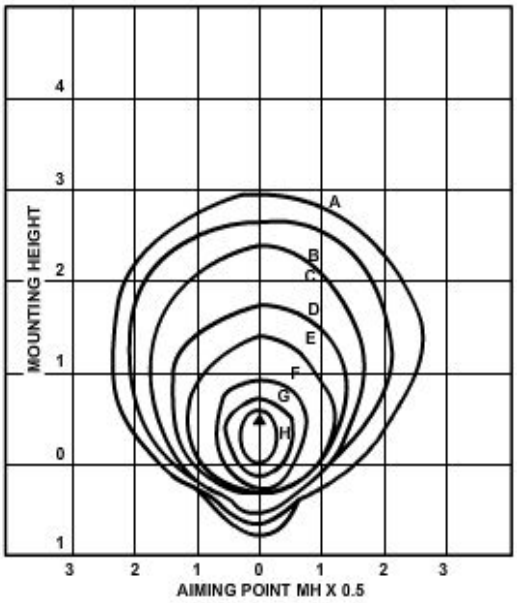

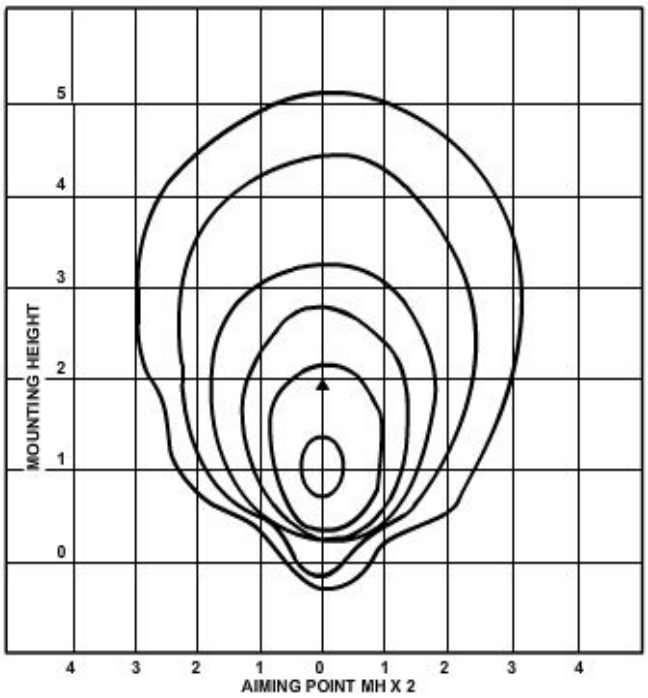

Figure 9-52 — Floodlight manufacturer's literature.

12.5.0 Isofootcandle Diagrams

The isofootcandle diagrams show what the light level will be at any given point. The dimensions for the diagram are based on the mounting height (MH) of the floodlight. The aiming point is also based on the mounting height. *Figure 9-52* provides a diagram for mounting heights of MH x 0.5, MH x 1, and MH x 2.

The grid pattern is also based on the mounting height. The grid line values left and right give the distance to either side of the floodlight. The values up the side show the distance in line with the aiming direction of the floodlight. The number 3, for instance, represents 3 x 40, or 120, feet from a 40-foot mounting height.

Each isofootcandle line shows where the footcandle level is the same. These lines are identified by a letter, which is used with the initial footcandle (fc) table. The footcandle values between isofootcandle lines do not change more than 2 to 1. That makes it possible to approximate the level between lines.

The initial footcandle table gives the footcandle value for each isofootcandle curve at a specific mounting height. The values for each letter are the same on each set of curves. That makes it possible to compare diagrams directly and interpolate between curves for different aiming distances.

The mounting heights given in the initial footcandle table are representative of the wattage and beam pattern associated with the floodlight. To convert to other mounting heights, use the following formula:

OLD

$$\frac{(FROMChart)}{(fc)(MH^2)}$$

NEW

$$\frac{(FROMCALCULATION)}{(fc)(MH^2)}$$

For example, a 5-footcandle level at 50 feet (isofootcandle curve F) would have a value of 4.13 at a 55-foot mounting height.

$$(5)(50^2) = (fc)\ (55^2)\ fc = 4.13$$

In *Figure 9-52* (aiming point MH x 2), the floodlight is aimed a distance of two mounting heights away from a point on the ground directly below the floodlight. That would be 80 feet for a 40-foot mounting height.

12.6.0 Utilization Graph

The luminaire utilization data graph (*Figure 9-52*) gives the percentage of the initial lamp lumens that fall into the area being lighted. Knowing this, you can easily determine the average lumens per square foot, or footcandles.

The number beside each curve identifies the aiming point, so that the utilization curve can be identified with the associated isofootcandle diagrams. In the example, for instance, the floodlight aimed two mounting heights away from the pole would have a utilization of 35 percent if it were lighting an area three mounting heights wide. The same floodlight aimed at one mounting height away from the pole would have a utilization of 45 percent for the same area.

12.7.0 Maintenance Factor

Lighting efficiency in floodlighting, as in streetlighting, is seriously impaired by blackened lamps, lamp life. and dirt on the reflecting surfaces of the luminaire. A

maintenance factor (MF) must be applied in the lighting calculations to compensate for the gradual losses of illumination on the lighted area.

The following maintenance factors have been widely used in industry when manufacturer's information is not available:

Enclosed flood lamps: 0.76

Open flood lamps: 0.65

12.8.0 Light Intensity Calculations

There are a number of ways to determine luminaire requirements. Since most methods require an engineering background, we will only discuss the basic area lighting design considerations that you, as a CE, can perform in the field if engineering assistance is not available. To better understand how to perform the calculations, solve this sample problem:

Determine the average, initial light level in a 160- foot x l60-foot material storage yard using two NEMA 6 x 5 HLX 1,000-watt floodlights.

Solution:

1. Apply the 2X – 4X rule (*Figure 9-53*) to determine spacing and mounting height. A 40 foot mounting height provides MH X 2 or an 80 foot aiming distance.
2. The formula used to calculate the average, initial light level (fc) is as follows:

$$fc = \frac{(N)(LL)(CU)}{AREA}$$

Where:

N = Number of floodlights

LL = Initial lamp lumens

CU = Utilization of the floodlights

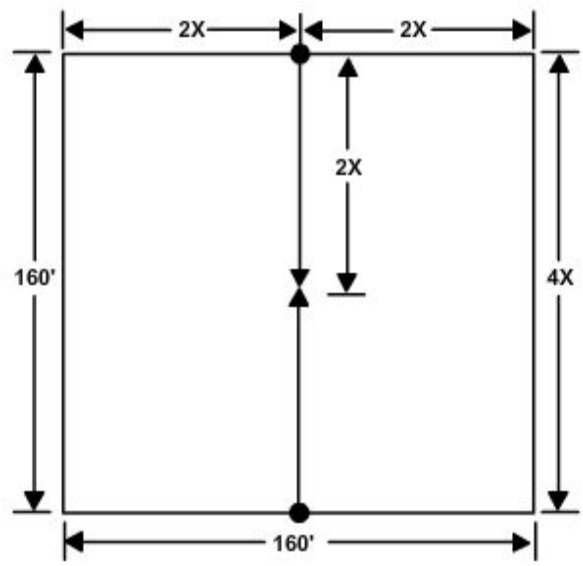

Figure 9-53 — Material yard sample problem.

From the utilization data (*Figure 9-52*), you can find that the utilization for the HLX luminaire aimed at two mounting heights across an area 160 feet or four mounting heights wide is 38 percent. The initial lumens for the 1,000 watt lamp are 140,000 lumens, obtained from the manufacturer's literature. Substituting in the following formula:

$$fc = \frac{(2)(140{,}000)(0.38)}{(160)(160)} = 4.2\,fc$$

Obtain the maintained light level by multiplying the initial light level by the maintenance factor.

$$fc = (4.2)(0.75) = 3.15\,fc$$

Using the isofootcandle diagram, we obtain point by point footcandle values: for example, the center of the area occurs just inside isofootcandle line E. From the initial

footcandle table, the 1,000-watt HLX at 40 feet produces 3.1 footcandles at line E and 7.8 at line F. Since the point is approximately one fourth of the distance between the two isofootcandle lines, the value will be about 4.0 footcandles. With the two floodlights contributing, the value in the center will be 8.0 footcandles. Note that the corners of the area will have very little light. That is why two or more floodlights are recommended at perimeter locations.

Another design method that will yield sufficient accuracy is the quick selector design method. Follow the general layout considerations shown in *Figure 9-53*. The watts per square foot obtained from the graph in *Figure 9-54* produce an average lighting level accurate to within 20 percent of desired value. That is close enough, since the difference between the luminaire requirement obtained from the graph and the number that will actually be needed to satisfy the physical requirements of the job involve adjustments greater than 20 percent. It is not unusual, for instance, to need two poles instead of one or to require three luminaries per pole instead of two. Do not use this calculation method for sports lighting or where the poles are set back from the area to be lighted.

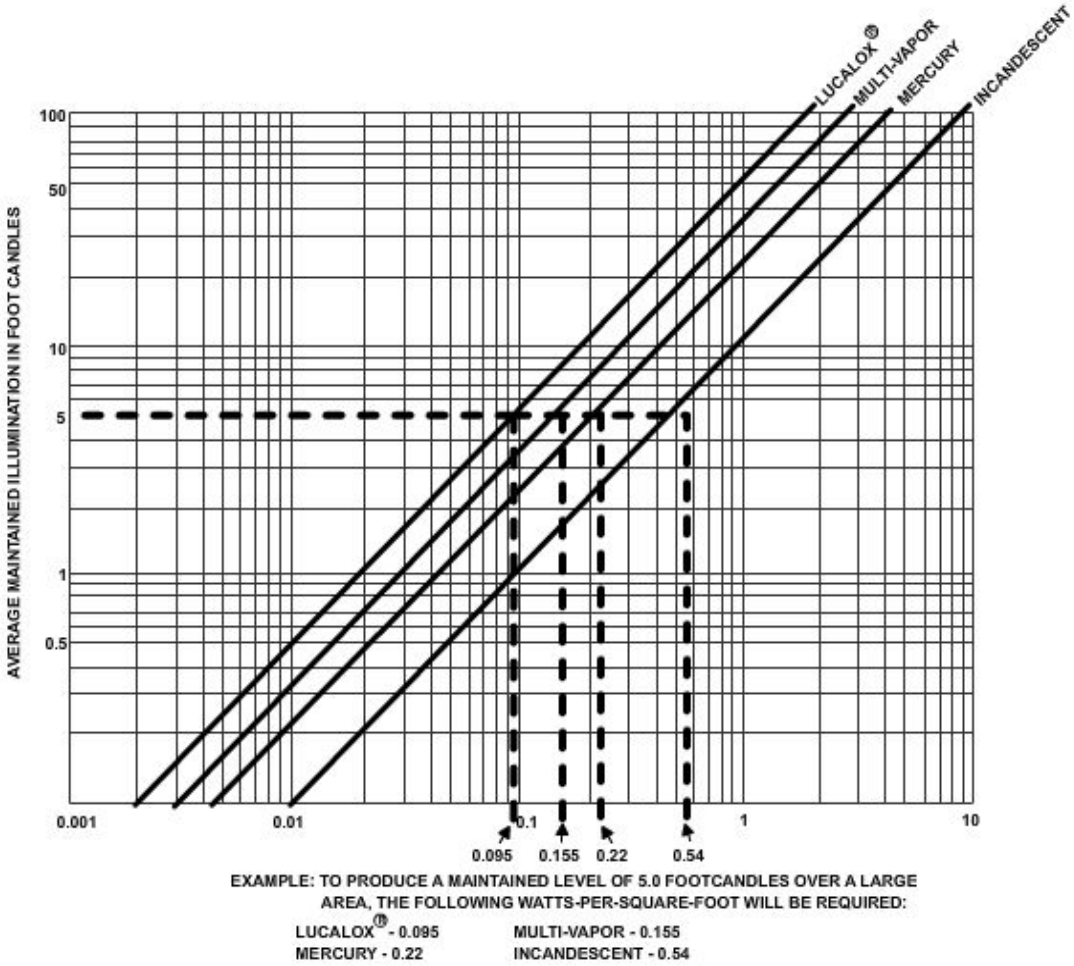

Figure 9-54 — Lamp watts per square foot chart.

Before determining the number of luminaries, work out the size of the area to be lighted. Also determine the maintained illumination level. The following rules of thumb provide some guidelines to help in these decisions.

1. The minimum average footcandles recommended for industrial yard/material handling is 5.

2. Read up the left side of the graph in *Figure 9-54* until you come to 5. Follow this line across until you intersect the dark diagonal line representing Lucalox®.
3. By reading straight down from this intersection to the value at the bottom of the chart, you find 0.095 lamp watts/square foot of the area is required to light the yard to 5 footcandles.
4. Area to be lighted is (160)(160) = 25,600 square feet.
5. Multiply 25,600 by 0.095 = 2.432 lamp watts
   a. 2,432 is more than two 1,000 watt Lucalox® lamps.
   b. 2,432 is approximately equal to six 400 watt Lucalox® lamps.
   c. 2,432 is approximately equal to ten250 watt Lucalox® lamps.
6. By using the general layout considerations, you will find that the most economical floodlight installation will use the 400 watt Lucalox® lamps, mounted on 40 foot poles, as shown below.

$$2X + 2X = 4X = 160\,feet$$

$$x = \frac{160\,feet}{4} = 40\,feetMH$$

13.0.0 SECURITY LIGHTING

Requirements for security lighting at activities will depend upon the situation and the area to be protected. Each situation requires careful study to provide the best visibility that is practical for guard duties, such as identifying personnel and vehicles, preventing illegal entry, detecting intruders, and investigating unusual or suspicious circumstances.

The type of security lighting may be either the continuous or the standby type. The continuous type, as the name implies, is on all the time during the hours of darkness. The standby type is activated either manually or automatically when suspicious activity is detected.

13.1.0 Security Area Classification

The installation of security lighting is set forth in *United States Navy Physical Security Manual,* OPNAVINST 5530.14. It provides specifications on searchlights and minimum footcandle requirements under given situations. The illumination of boundaries, entrances, structures, and areas must be according to the security manual.

13.2.0 Lighting Control

Each security lighting system is designed to meet a particular need of the activity. The design is such that it provides the security required at maximum economy.

Multiple circuits may be used to advantage here. The circuits are so arranged that the failure of any one lamp will not darken a long section of the area. The protective lighting system should be independent of other lighting systems and protected from interruption in case of fire.

Lock and/or guard the switches and controls of the system at all times. The most effective means is to locate them in a key guard station or central station similar to the system used in intrusion alarm central station installations.

13.3.0 Alternate Power Sources

In general, any security area provided with protective lighting should have an emergency power source located within that security area. The emergency power source should be adequate to sustain all security requirements and other essential service required within the security area. Make provisions to ensure the immediate availability of emergency power in the event of power failure. Security force personnel should be capable of operating the power unit. If technical knowledge prevents this, plans must provide for responsible personnel to respond immediately in times of emergency. In addition, battery-powered lights and essential communications should be available at all times at key locations within the secure area.

Summary

Many advances in lighting and communications have occurred in the past few years. With the cost of energy rising daily and the demand for accurate and reliable communications, any system that provides a higher level of efficiency must be considered. In this chapter we discussed public address systems, interoffice communications, area street lighting, floodlighting, security lighting, and the fundamentals of fiber-optic communication cables and components. As a CE you will be tasked to construct and maintain these systems.

Review Questions (Select the Correct Response)

1. During which decade, with the invention of lasers, did widespread interest in optical communications begin?

   A. 1960's
   B. 1970's
   C. 1980's
   D. 1990's

2. Which of the following is NOT an example of optical waveguides?

   A. Glass fibers
   B. Plastic fiber tubes
   C. Gas filled pipes
   D. Tubes with focusing lenses

3. The decrease in the amount of light reaching the end of a fiber is known as what?

   A. Downturn
   B. Negative
   C. Loss
   D. Detenuation

4. When was the small area light emitting diode developed?

   A. 1965
   B. 1967
   C. 1969
   D. 1971

5. What fiber optic system design connects a user to the nearest switching center?

   A. Subscriber loop plant
   B. Multimedia loop
   C. Long haul communication
   D. Short haul communication

6. What are the two types of optical fibers used in industry?

   A. Triaxial and diaxial mode fibers
   B. Multimode and single mode fibers
   C. Subscriber loop and long haul communication fibers
   D. Biaxial and Multimode fibers

7. Which of the following is NOT an advantage of using fiber optics?

   A. Signal security
   B. System performance
   C. Improved acoustical isolation
   D. Improved safety

8. Why is the cost of fiber optic systems decreasing?

   A. Decrease in electrical systems produced
   B. Decrease in system usage
   C. Increase in repair parts
   D. Increase in fiber optic technology

9. The basic structure of an optical fiber consists of how many parts?

   A. 3
   B. 1
   C. 2
   D. 4

10. From what material is the core of a fiber optic fiber generally manufactured?

   A. Plastic
   B. Glass
   C. Copper
   D. Polyurethane

11. The cladding layer performs which of the following functions?

   A. Reduces the loss of light from the buffer
   B. Protects the core from surface contaminants
   C. Adds mechanical strength
   D. Reduces scattering loss form the center of the core

12. From what material is the buffer generally manufactured?

   A. Glass
   B. Copper
   C. Polyurethane
   D. Plastic

13. When do microbends occur?

   A. When the fiber optic cable is placed on an distorted surface
   B. When the fiber optic cable is routed through small openings
   C. When the fiber optic cable is placed on smooth surfaces
   D. When the fiber optic cable is routed through elbow

14. Which of the following is NOT included in the manufacturing of the cable structure?

A. Buffers
B. Cladding
C. Strength members
D. Jackets

15. What material helps preserve the inherent strength of the optical fiber?

A. Cladding material
B. Epoxy resin
C. Buffer material
D. Polyurethane coating

16. How many types of buffer fibers are there?

A. 1
B. 2
C. 4
D. 3

17. In large fiber count commercial applications, what type of fiber buffer is utilized?

A. Loose tube buffers
B. Gel filled loose tube buffers
C. Tight buffers
D. Dielectric filled buffers

18. In Navy applications, what type of fiber buffer is utilized?

A. Loose tube buffers
B. Tight buffers
C. Gel filled loose tube buffers
D. Dielectric filled buffers

19. What piece of equipment is used to protect the fiber from strain?

A. Central support
B. Fiber buffers
C. Strength members
D. Jackets

20. What piece of equipment adds an additional environmental layer of protection?

A. Central support
B. Fiber buffers
C. Strength members
D. Jackets

21. Which of the following is a property of the jacket material utilized?

A. Low halogen content
B. Fluid absorption
C. Low abrasion resistance
D. High toxicity

22. What is the function of a fiber optic data link?

A. Convert an optical signal to an acoustical signal
B. Convert an electrical signal to an optical signal
C. Send the optical signal over an electrical path
D. Send an acoustical signal over an optical path

23. How many parts comprise a fiber optic data link?

A. 1
B. 2
C. 3
D. 4

24. What does a fiber optic data link require to convert an electrical signal and launch down the optical line?

A. Generator
B. Amplifier
C. Receiver
D. Transmitter

25. What is utilized to make an optical connection between two individual fibers?

A. Splice
B. Cross connect
C. Insulator
D. Joint

26. **(True or False)** A joint permits the repair of fibers during installation.

A. True
B. False

27. How many techniques are used for fiber splicing?

A. None
B. 1
C. 2
D. 3

28. What type of splice is defined as a splice where heat fuses or melts the ends?

A. Electrical
B. Mechanical
C. Soldering
D. Fusion splice

29. What device permits the coupling of optical power between two fibers or groups of fibers?

A. Fiber optic connector
B. Fiber optic alignment bracket
C. Fiber optic splice
D. Fiber optic insulator

30. What are the basic types of fiber optic connectors?

A. Expanded beam, butt jointed, and “V” grooved
B. Butt jointed and expanded beam
C. Butt jointed and “V” grooved
D. Cylindrical ferrule, expanded beam, and biconical

31. What are the two basic types of butt jointed connectors?

A. Expanded beam and butt jointed
B. Butt jointed and biconical
C. Cylindrical ferrule and biconical
D. Expanded beam and cylindrical ferrule

32. What type of connections are expanded beam connectors?

A. “C” clamped connections
B. Ferruled knob connections
C. Snap ring connections
D. Plug adapter plug type connections

33. The same amount of angular misalignment in butt jointing coupling produces what kind of loss in expanded beam coupling?

A. Higher
B. Lower
C. No change

34. What allows for the redistribution of optical signals?

A. Expanded beam connectors
B. Fiber optic coupler
C. Butt jointed connectors
D. Redistribution transformer

35. What can combine the optical signals from two or more fibers into a single fiber?

A. Redistribution transformer
B. Expanded beam connectors
C. Fiber optic coupler
D. Butt jointed connectors

36. Fiber optic couplers are either of what two types of devices?

A. Passive or neutral
B. Active or neutral
C. Passive or broadband
D. Active or passive

37. Which type of coupler redistributes the optical signal without optical to electrical conversion?

A. Passive
B. Neutral
C. Active
D. Broadband

38. How many different types of fiber optic couplers will you work with as a CE?

A. 6
B. 5
C. 4
D. 2

39. Which device is responsible for signal conversion?

A. Fiber optic couplers
B. Fiber optic connectors
C. Fiber optic transmitter
D. Fiber optic amplifiers

40. How many circuits are contained in a fiber optic transmitter device?

A. 5
B. 4
C. 3
D. 2

41. Which circuit installed in the fiber optic transmitter modulates the optical source by varying the current?

A. Source drive
B. Interface
C. Modulation
D. Amplifier

42. What are light waves that lack a fixed phase relationship called?

A. Minus light
B. Incoherent light
C. Briggs light
D. Coherent light

43. Laser diodes emit which type of light?

A. Minus light
B. Incoherent light
C. Coherent light
D. Briggs light

44. Laser diodes are able to launch what type of power in single mode and multimode optical fibers?

A. Voltage
B. Acoustical
C. Electrical
D. Optical

45. What is the amount of power that can be coupled into a fiber called?

A. Relevant optical power
B. Coherent optical power
C. Incoherent optical power
D. Complex optical power

46. At what angle range does a semiconductor laser emit?

A. 5 to 10 degrees
B. 10 to 15 degrees
C. 15 to 20 degrees
D. 20 to 25 degrees

47. What is the other name for the special layer that is constructed into the semiconductor source?

A. Passive layer
B. Dopant layer
C. Active layer
D. Buffer layer

48. What are the two most common semiconductor materials used in electro-optic devices?

A. Magnesium and Gallium
B. Arsenide and Silicon
C. Copper and Silicon
D. Silicon and Gallium Arsenide

49. Which of the following materials can be added to modify the semiconductor properties?

A. Indium
B. Phosphate
C. Fluoride
D. Silver

50. What is the random generation of photons within the active layer of the LED called?

A. Dopants dropping
B. Spontaneous emission
C. Menda cyclic emissions
D. Spontaneous excitation

51. How is excessive energy released in a LED?

A. Voltage limiter
B. Bit bucket
C. Through heat
D. Through osmosis

52. Transmitter output interfaces generally fall into what two categories?

A. Optical connectors and optical detectors
B. Optical fiber pigtails and optical detectors
C. Optic fiber pigtails and fiber optic receivers
D. Optical connectors and optical fiber pigtails

53. How is the pigtail connected to the transmitter?

A. Epoxied
B. Wire wrapped
C. Screwed
D. Melted

54. Which of the following is NOT a factor in signals becoming distorted?

A. Scattering
B. Microbending
C. Absorption
D. Dispersion

55. Which piece of equipment converts weakened optical signals back into electrical signals?

A. Fiber optic amplifier
B. Fiber optic connector
C. Fiber optic receiver
D. Fiber optic detectors

56. The low noise amplifier is part of which piece of equipment?

A. Fiber optic amplifier
B. Fiber optic connector
C. Fiber optic detector
D. Fiber optic receiver

57. What converts input energy of one form into an output energy of another form?

A. Transducer
B. Transmitter
C. Detector
D. Receiver

58. A point to point fiber optic data link consists of how many parts?

A. 2
B. 3
C. 4
D. 5

59. Bending an optical cable at a radius smaller than the minimum bend radius will cause which of the following to occur?

A. Attenuation gain
B. Increase in signal
C. Nothing
D. Signal loss

60. Which of the following might possibly lead to fiber breakage?

A. Extremely sharp bends
B. Increased current flow
C. Decrease in output signal level
D. Weather conditions

61. What types of measurements are conducted to measure the transmission properties of installed fiber optic components?

A. Design
B. Field
C. Lab
D. Connell

62. Which piece of equipment is used for measurements on fibers 50 meters or longer?

A. OLTS
B. ODTR
C. OTDR
D. OTLS

63. Which function does the OTDR perform?

A. Location of current leakage
B. Speed of light transmission
C. Refectory measurements
D. Location of fiber breaks

64. Measurements with stabilized light source and power meter are more accurate than what type of test equipment?

A. OTDR
B. OLTS
C. ODTR
D. OTLS

65. Optical loss test set combines source functions and what else into one physical unit?

A. OTDR
B. Power meter
C. Circuit overload circuitry
D. Light source

66. A fiber optic plant consists of many different pieces of equipment?

A. 4
B. 5
C. 6
D. 7

67. Which of the following is not considered a type of mechanical splice?

A. Glass
B. Metal
C. Rotary devices
D. “C” groove

68. The “V” grooved device that uses two positioning rods is called what?

A. Spring “V” grooved splice
B. Rotary splice
C. Spring “C” grooved splice
D. Fusion splice

69. What type of epoxy is used in the rotary splice operation?

A. Polyurethane epoxy
B. Ultraviolet cure epoxy
C. Transparent adhesive epoxy
D. Bonding cure epoxy

70. Which method is used during the fusion splice process?

A. Rapid boring method
B. Score method
C. Score and break method
D. Break method

71. Normally multi fiber splices are installed on what type of fiber optic cables?

A. Rotary type
B. Fusion type
C. Braided type
D. Ribbon type

72. What is the most common type of mechanical splice?

A. Ribbon
B. Rotary
C. Cleaved
D. Fusion

73. How many amplifiers are associated with the system commonly utilized by the US Navy for public addressing?

A. None
B. 1
C. 2
D. 3

74. What voltage runs the solid state amplifier?

A. 28 volts
B. 220 volts
C. 120 volts
D. 440 volts

75. What is the most important setup step associated with installation of public address systems?

A. Speaker output voltage
B. Amplifier placement
C. Yellow warning light in cab
D. Amplifier output voltage

76. For best results in sound, which type of cable is used in the installation of a public address system?

A. Two conductor shielded cable
B. Shielded cable
C. Biconical cable
D. Grounded cable

77. An intercom system consists of two basic configurations, all master system and what other?

A. Master multiple remote system
B. Single master multiple remote system
C. Remote master system
D. Independent master system

78. How many steps are associated with the setup of the interoffice communications system?

A. 2
B. 3
C. 4
D. 5

79. Unit of luminous intensity is also known as what term?

A. Candle volt
B. Isofootcandle
C. Candle watt
D. Candela

80. Which of the following terms defines a quantity of light?

A. Lumen
B. Flux
C. Candlepower
D. Isofootcandle

81. What unique characteristic do high intensity discharge lamps have?

A. Resistance increases as the lamp heats up.
B. Resistances decreases as the lamp heats up.
C. There is no resistance movement as lamp heats up.
D. No characteristics are associated with HID.

82. On the high pressure mercury lamp, what is the inner arc tube constructed from?

A. Copper
B. Glass
C. Quartz
D. Tungsten

83. Which of the following is NOT a use for mercury lamps?

A. Outdoor area lighting
B. Street lighting
C. Security lighting
D. Indoor lighting

84. Which of the following lamps has the highest light producing efficiency?

A. High pressure sodium lamps
B. High pressure mercury lamps
C. Fluorescent lamps
D. High intensity discharge lamps

85. What is the arc tubes constructed of in high pressure sodium lamps?

A. Tungsten
B. Alumina ceramic
C. Quartz
D. Sodium

86. What type of gas is used in association with the high pressure sodium lamps?

A. Neon
B. Argon
C. Xenon
D. Nitrogen

87. What material is used to coat the inside of the fluorescent lamp?

A. Sulfate
B. Argon
C. Xenon
D. Phosphor

88. Which of the following is NOT considered a category for ballast associated with fluorescent lamps?

A. Regulating
B. Non regulating
C. Lag type regulating
D. Lead type regulating

89. What are the three roadway classifications used for street lighting?

A. Local, residential, and major
B. Local, collector, and major
C. Residential, intermediate, and commercial
D. Commercial, local, and collector

90. How many different types of selection of luminaire patterns are there?

A. 2
B. 3
C. 5
D. 6

91. The transverse direction is defined as

A. Up and down the length of the road
B. Centerline to shoulder
C. Intersection to intersection
D. Shoulder to shoulder

92. Luminaire overhang should NOT exceed what percentage of the mounting height?

A. 25%
B. 50%
C. 75%
D. 100%

93. **(True or False)** The utilization curve shows the amount of light that falls on the roadway.

A. True
B. False

94. Ratio of actual lamp lumens divided by 1,000 is also known as what following term?

A. Lamp Value
B. Lamp Intensity
C. Lamp Factor
D. Lamp Coefficient

95. What piece of equipment's basic function is to prevent damage to lamps and lamp sockets?

A. Reflector
B. Housing
C. Cover
D. Fixture

96. What prevents interruption of the circuit upon a lamp failure?

A. Film disk cutouts
B. Reflector
C. Cover
D. Fixture

97. When two primary crossarms are used, the streetlight wires should be carried in what location?

A. Upper arm
B. Lower arm
C. Underground
D. Alongside

Trade Terms Introduced in this Chapter

Laser	a device that produces a nearly parallel, nearly monochromatic, and coherent beam of light by exciting atoms to a higher energy level and causing them to radiate their energy in phase. l(*ightwave*) *a*(*mplification by*) *s*(*timulated*) *e*(*mission of*) *r*(*adiation*)
Cladding	the act or process of bonding one metal to another, usually to protect the inner metal from corrosion.
Microbends	Event which occurs when an optical fiber is placed on a rough and distorted surface
Helical	pertaining to or having the form of a helix; spiral.
Elastomers	an elastic substance occurring naturally, as natural rubber, or produced synthetically, as butyl rubber or neoprene
Splice	to join or unite
Hybrid	composite; formed or composed of heterogeneous elements
Incoherent light	Light that lacks a fixed phase relationship
Dopants	an impurity added intentionally in a very small, controlled amount to a pure semiconductor to change its electrical properties
Transducer	a device that receives a signal in the form of one type of energy and converts it to a signal in another form
Attenuation	the act of attenuating or the state of being attenuated
Capillary	pertaining to or occurring in or as if in a tube of fine bore
Substrate	a supporting material on which a circuit is formed or fabricated
Ferrule	a short ring for reinforcing or decreasing the interior diameter of the end of a tube
Epoxy	any of a class of resins derived by polymerization from epoxides: used chiefly in adhesives, coatings, electrical insulation, solder mix, and castings
Cleaved	to adhere closely; stick; cling
Flux	continuous change, passage, or movement
Lumen	the unit of luminous flux, equal to the luminous flux emitted in a unit solid angle by a point source of one candle intensity. *Abbreviation:* lm

Additional Resources and References

This chapter is intended to present thorough resources for task training. The following reference works are suggested for further study. This is optional material for continued education rather than for task training.

*Unified Facilities Criteria (*UFC*) 3-560-0*1 (Electrical Safety, Operation and Maintenance)

OSHA Regulations (Standards – 29 CFR)

American National Standards Institute (ANSI Z89.2-1971)

Naval Construction Force Manual, NAVFAC P-315, Naval Facilities Engineering Command, Washington, D.C., 1985.

National Electrical Code®, National Fire Protection Association, Quincy, MA, 2008

Standard Practice for Roadway Lighting, American National Standard Institute, Inc. Illuminating Engineering Society, ANSI/IES RP8-1983(R1993), New York.

NCF Equipment Management Manual, NAVFAC P-404 Naval Facilities Engineering Command, Washington, D.C., 1985.

Introduction to Fiber Optics, Navy Electricity and Electronics Training Series, Module 24, NAVEDTRA B72-24-00-92, Naval Educational Training Program Management Support Activity, Pensacola, FL, 1992.

Informational Guide for Roadway Lighting, American Association of State Highway and Transportation Officials, Washington, DC.

Wire Communications and Signal Systems, MIL-HDBK-1004/7, Department of Defense, Washington, DC, 1991.

United States Navy Physical Security Manual, OPNAVINST 5530.14

CSFE Nonresident Training Course – User Update

CSFE makes every effort to keep their manuals up-to-date and free of technical errors. We appreciate your help in this process. If you have an idea for improving this manual, or if you find an error, a typographical mistake, or an inaccuracy in CSFE manuals, please write or email us, using this form or a photocopy. Be sure to include the exact chapter number, topic, detailed description, and correction, if applicable. Your input will be brought to the attention of the Technical Review Committee. Thank you for your assistance.

Write: CSFE N7A
3502 Goodspeed St.
Port Hueneme, CA 93130

FAX: 805/982-5508

E-mail: CSFE_NRTC@navy.mil

Rate____ Course Name_____

Revision Date_____ Chapter Number____ Page Number(s)_____

Description

_____

_____

_____

(Optional) Correction

_____

_____

_____

(Optional) Your Name and Address

_____

_____

_____